TALIS

Product brochure

ROCO Wave
Double Eccentric Butterfly Valve

ERHARD RANGE

PBR_DBV_200803_ROCO_WAVE_EN


Water treatment
Water transmission
Water distribution network
Sewage network and treatment
Dams and hydro power
Industrial water applications

TABLE OF CONTENTS

TABLES

WHO WE ARE

ERHARD is one of the world's leading manufacturers of water valves, with over 145 years of experience.

The success story began in 1871 when Johannes Erhard founded a small workshop in Heidenheim, Germany, for producing brass water taps.

Today ERHARD supplies valves for all sectors of the water supply industry, in all size ranges. A comprehensive range of standard valve products is just as much part of our portfolio as tailormade solutions for large scale installations.

ERHARD offers complete solutions in the field of valves, including related technical calculations of the pipeline, combined with a high level of expertise and a long experience in valve construction. Also «customized» special valves and complete solutions are part of the product range. A special focus is on an intelligent construction «made in Germany», which ensures the highest quality, reliability and the proverbial Swabian solidity. With ERHARD products, the user benefits from a reliability that goes far beyond the required standards.

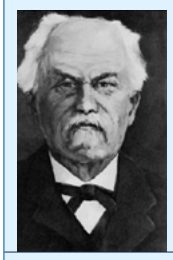

1871

Foundation of ERHARD by Johannes Erhard

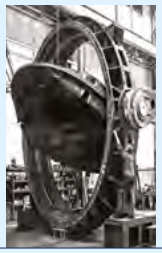

1904

Management buyout by the nephew Josef Waldenmaier

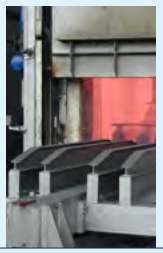

1962

Start of the production at the new site in Oettingen (Bavaria)

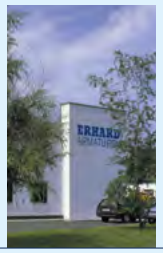

1986

ERHARD buys the plant in Daun (from Mark Controls)

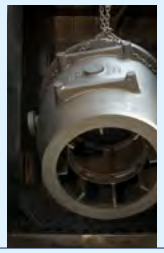

1998

Management buy-in from Deutsche Armaturen AG

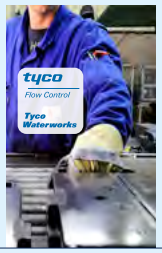

2001

Management buy-in from TYCO Waterworks EMEA

2002

Investment of 4,5 Mio. EURO in the plant in Heidenheim: new manufacturing halls to optimize the processes

2007

Water Supply Project Ankara: second largest order in the history of the company

2008

Project Fujairah II in the UAE: inauguration of the new FBE and liquid-coating plant as well as the new vitreous-enamel coating plant with integrated shotblasting plant

2010

Acquisition by Triton and creation of TALIS

2010

ERHARD delivered a butterfly valve DN 3600 for a new coal-fired power station

2011

140 years ERHARD

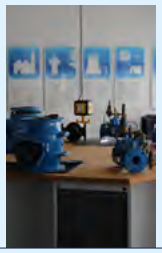

2013

Opening of the Valve Academy in Heidenheim

2017

Inauguration of the new ERHARD logistics center in the immediate vicinity of the company headquarters

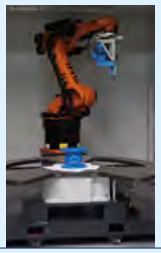

2018

Investments in the Heidenheim plant: new production machines to optimize the production flow of ROCO Wave butterfly valves

EXPERIENCE WITH A BIG VARIETY OF APPLICATIONS

DAMS & HYDROPOWER

ERHARD Butterfly Valves are installed in large, medium and small scale hydropower plants and dams, mostly designed as safety valves for over-speed protection and main pipe burst control, suitable for up to 30 m/s flow velocity.

Steinbachtalsperre
Germany, 2017

100 Valves
DN 200-500, PN 10-40

Warragamba dam
Australia, 2004/2017

10 Valves
DN 2100-2400, PN 16

MUNICIPAL UTILITIES AND WATERWORKS

ROCO Wave fully complies with the German DVGW drinking water standards certifying safety, hygiene and the highest quality. The design, coating and components ensure absolutely clean drinking water.

Stadtwerke Sindelfingen
Germany, 2017

80 Valves
DN 100-300, PN 16

WATER TRANSMISSION

Minimized head losses make ROCO Wave the first choice for pipelines transporting huge volumes of water. High quality coatings and components meet all requirements concerning the medium or ambient, such as high salinity.

Kahramaa Mega-Reservoir
Qatar, 2017

300 Valves
DN 600-2400, PN 16

INDUSTRIAL APPLICATIONS

ROCO Wave is especially used in cooling circuits for a multitude of industries, such as power plants, metal and chemical industry.

Yinxing Power Plant
China, 2016/2017

200 Valves
DN 200-1200, PN 16/25

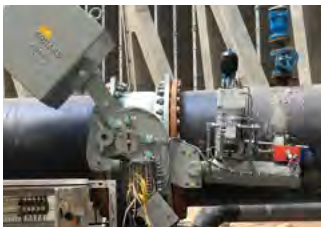

WATER TREATMENT / SEAWATER

In water treatment plants, the inside of the valve is protected with enamel coating against salt water, limescale and abrasion by sand or other hard elements, and is thus also suitable for brackish and seawater.

Fishfarm Smolten
Norway, 2014/2017

100 Valves
DN 300-600, PN 10

DOUBLE ECCENTRIC BUTTERFLY VALVES

ROCO WAVE

Proven design, reliability and experience:
With its flow-optimized design, this double eccentric valve offers outstanding features for a sustainable future. Minimized pressure losses and high energy-efficiency are two key properties for which this valve was developed. The patented polygon connection of shaft and disc provides uninterrupted corrosion protection and optimal torque transmission at the same time. The use of a slider crank gearbox allows safe operation with minimized pressure surges. The valve is suitable for bidirectional use and tight in both directions.

ADVANTAGES

- **Efficiency:**
  Flow-optimized disc and seat design combine stability with best hydraulic performance for optimum energy efficiency and savings.
- **Corrosion Protection and clean water:**
  Superior epoxy and enamel quality as well as design with closed disc eyes. and polygon shaft protect the product without any interruption of the coating.
- **Power:**
  The high-precision polygonal plug connection of shaft and disc is absolutely free of play and reliably transmits the drive torque without losses.
- **Safety:**
  ROCO Wave reliably seals even under the highest dynamic loads. The SKG gearbox minimizes the risk of water hammer, due to its two-step closing action.
- **Durability:**
  Long-lasting, high-quality components make ROCO Wave the premium product of your choice.

APPLICATIONS

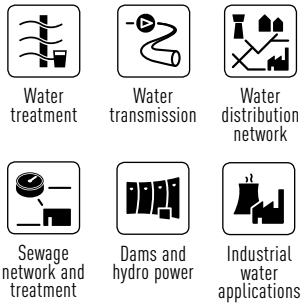

USES

- **On Water treatment:**
  For classic drinking water treatment ROCO Wave complies with German DVGW standards certifying safety and hygiene. Opting for enamel coating, grants additional protection against seawater, limescale and abrasion by sediments in raw water.
- **Water transmission and distribution:**
  Minimized head losses for best energy efficiency in pipelines transporting big volumes of water over long distances.
- **Dams and hydropower:**
  For small, medium and large installations. Often designed as safety valves for over-speed protection and main pipe burst control with weight loaded actuator.
- **Industrial water applications:**
  Often installed in cooling circuits for a multitude of industries, such as power plants, metal and chemical industries.

CHARACTERISTICS

- Highly energy efficient, with superior zeta and Kv values
- Patented seat geometry and increased seat diameter for best hydraulic performance
- Polygon shaft with patented plug connection provides uninterrupted corrosion protection, completely free of play
- Closed disc eyes Patented seat and disc geometry minimizing head losses
- Patented seat geometry minimizing head losses
- SKG gearbox with unique slider crank mechanism protects against water hammer by gradually slowed closing
- Proven design, reliability and experience: more than 70 years of experience with butterfly valves
- 100% tested according to DIN EN 12266, type tests according to DIN EN 1074
- Made in Germany

TECHNICAL DATA

- **Double eccentric butterfly valve**
  design standard DIN EN 593
- **Face-to-face dimension**
  EN558 series 14
- **Sizes**
  DN 200 - DN 3000 PN 10
  DN 150 - DN 3000 PN 16
  DN 150 - DN 2000 PN 25
  DN 150 - DN 2000 PN 40
- **Flange Drilling**
  PN10 to PN40 acc. to EN 1092-2
- **Medium Temperature**
  -10°C to 60°C
- **Coating:**
  Epoxy 250 µm GSK Enamel

APPROVALS

- DVGW, WRAS, KIWA, GOST

OPTIONS/VARIANTS

- **Coating:**
  EPC coating for abrasive media or sea water
  Hard rubber coating for chemical, thermal and mechanical exposure
  Epoxy ceramic for high temperature applications
  Thickness of epoxy coating up to 500 µm
  Individual color coatings using PU lacquers
  Conductive special coatings according to ATEX
  Special coatings
- **Materials**
  Bolts in A4
  Retaining ring 1.4301, 1.4571
  Shaft 1.4057, Duplex (1.4462)
  Sealings NBR, FKM (Viton)
  Body/disc EN-GJS-500-7,EN-GJS-400-18-LT
- **Connection and flanges**
  ANSI, BS, AS flanges
- **Gearbox options**
  Inductive or mechanical position indicator
  Limit switches
  Anti-clockwise closing
- **Additional flange foot for stabilization**
- **3 point locking system**

DESIGN HIGHLIGHTS

- SAFE AND RELIABLE
- EFFICIENT
- VERSATILE AND CUSTOMIZABLE

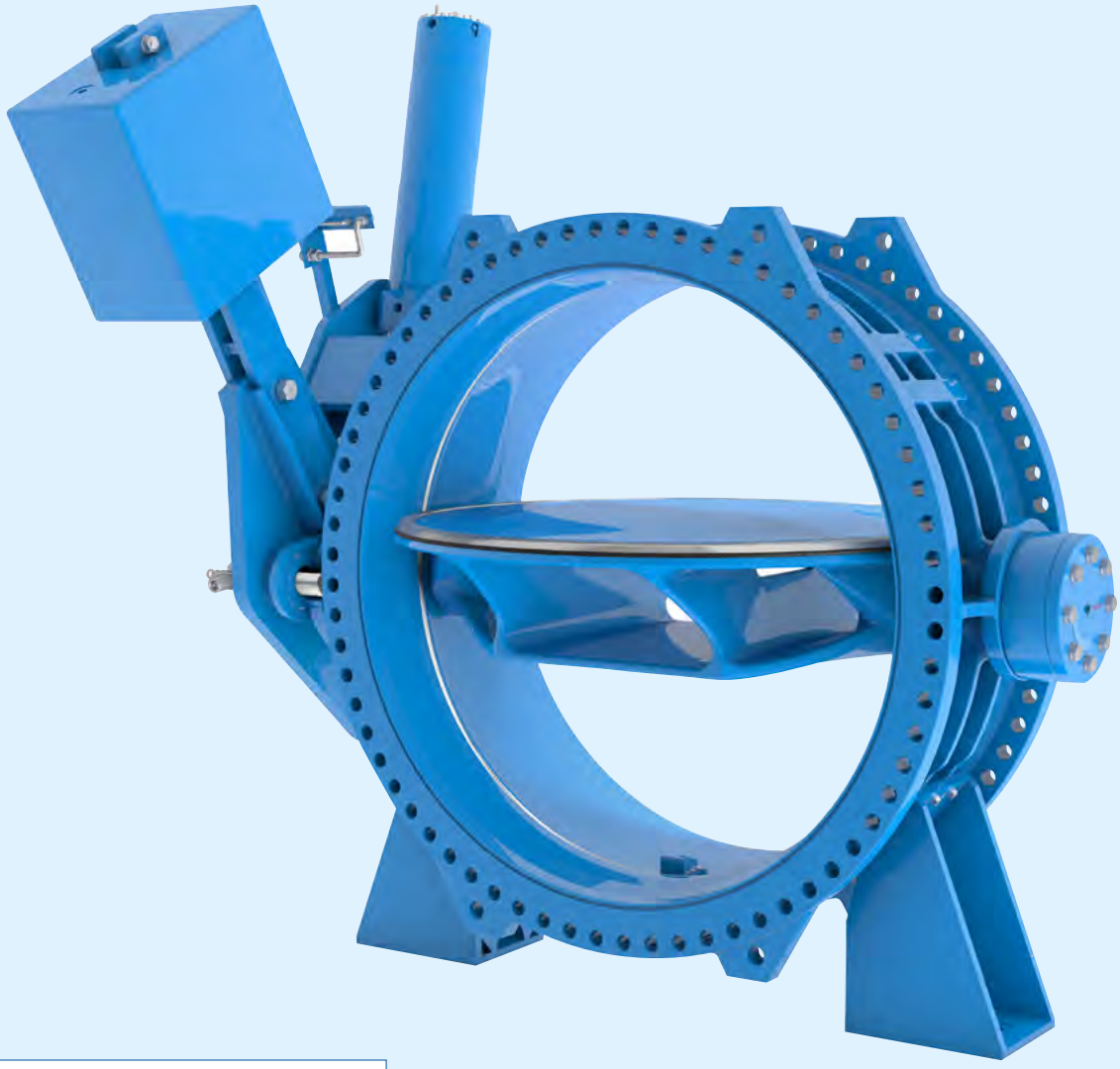

TECHNICAL ADVANTAGES

Flow optimized disc design

- "Wave" form for lower pressure ranges and up to DN 1600
- "Skeleton" form for higher pressure ranges and diameters
- **Highest stability** for demanding operating conditions

Patented polygonal plug connection

- **Ideal torque transmission** absolutely free of play
- No additional connecting elements
- Closed disc eyes
- Uninterrupted corrosion protection for clean water

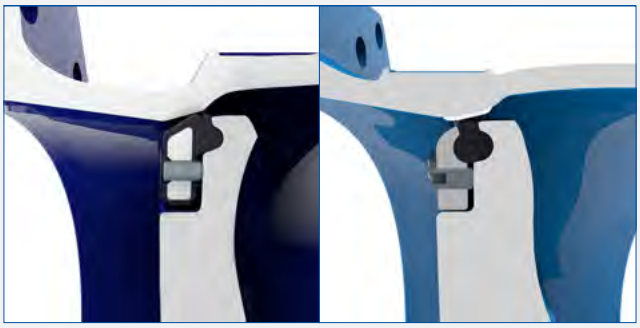

Seat design

- Epoxy coated valves with welded stainless steel ring, enameled valves with integral seat
- Patented profile and diameter ensure **max. hydraulic efficiency**
- Protection against crevice corrosion

Main sealing system

- For DN 150-600, PN 10/16 compact design as one-piece fully EPDM rubberized profile sealing ring
- For other sizes the EPDM sealing ring is fixed by means of a retaining ring, either epoxy coated or of stainless steel 1.4301
- **Proven design** and easy maintenance

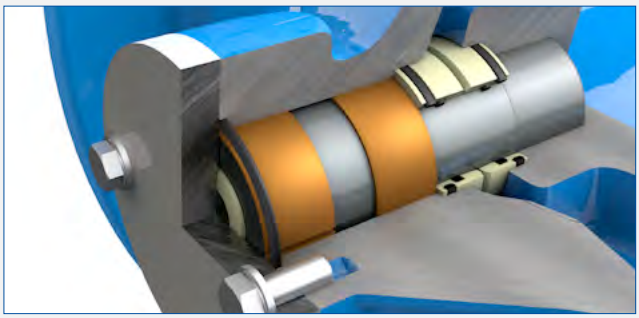

Shaft bearing and sealing concept

- **Maintenance-free** self-lubricating PTFE coated bushes
- Multifunctional POM O-ring cages serve as bearing, sealing and corrosion protection

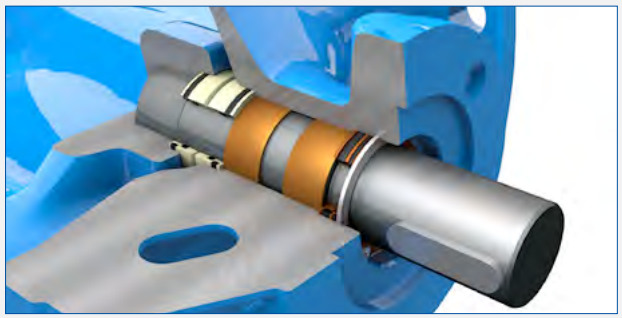

- Safety circlip protects against blow-out, **ensuring safety during dismounting**
- Levelling washer ensures that no axial motion is possible for the shaft
- Brass cage for additional sealing

POWERFUL CONNECTION

PATENTED POLYGON PLUG CONNECTION

A strong connection is required in order to reliably transmit drive forces to the disc.
The patented polygon plug connection is a result of decades of development and production know-how at ERHARD and ensures ideal torque transmission.
Highest manufacturing precision according to the standard DIN 32711 enables a connection absolutely free of play.
Additionally, the design with the polygon plug connection allows completely closed disc eyes with an uninterrupted corrosion protection.

The polygon plug connection is perfectly adjusted to the ERHARD SKG gearbox with a slider-crank mechanism, enabling precise and safe power transmission.

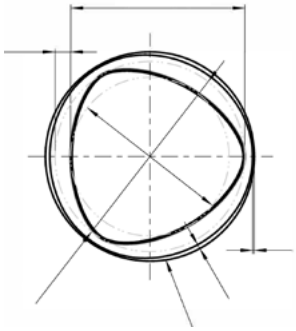

ROBUST WEDGE KEY CONNECTION

For higher nominal widths beyond the polygonal connection standard DIN 32711, ERHARD relies on the robust wedge connection, proven in many installations throughout the decades.
It also ensures clearance-free power transmission at highest dynamic loads, for nominal widths up to DN 3000.
The wedge connection, as a force-locking connection element, is precisely tight-fitted for every single valve, connecting shaft and disc, free of play.
Depending on nominal width and operating pressure, one or two wedge keys are insterted and secured safely with a key securing device on the shaft front side.

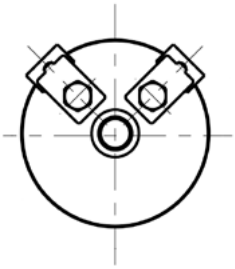

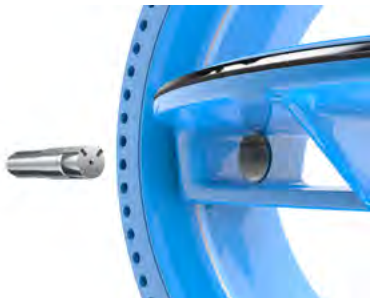

DESIGN VARIANTS BY SIZE

The table below provides an overview of the design conversion throughout the standard sizes.

SEALING SYSTEM

P

Profile sealing ring

R

Profile ring with retaining ring

DISC DESIGN

W

Wave disc

S

Skeleton disc

SHAFT-DISC-CONNECTION

P

Polygon plug connection

K

Wedge key connection

DN	PN 10	PN 16	PN 25	PN 40
80*		E	E	
100*		E	E	
125*		E	E	
150	P	P	R	R
200	P	P	R	R
250	P	P	R	R
300	P	P	R	R
350	P	P	R	R
400	P	P	R	R
450	P	P	R	R
500	P	P	R	R
600	P	P	R	R
700	R	R	R	R
750	R	R	R	R
800	R	R	R	R
900	R	R	R	R
1000	R	R	R	R
1100	R	R	R	R
1200	R	R	R	R
1300	R	R	R	R
1400	R	R	R	R
1500	R	R	R	R
1600	R	R	R	R
1800	R	R	R	R
2000	R	R	R	R
2200	R	R		
2400	R	R		
2600	R	R		
2800	R	R		
3000	R	R		

PN 10	PN 16	PN 25	PN 40
	E	E	
	E	E	
	E	E	
W	W	W	W
W	W	W	W
W	W	W	W
W	W	W	W
W	W	W	W
W	W	W	W
W	W	W	W
W	W	W	W
W	W	W	S
W	W	W	S
W	W	W	S
W	W	W	S
W	W	W	S
W	W	S	S
W	W	S	S
W	W	S	S
W	W	S	S
W	W	S	S
W	W	S	S
W	W	S	S
W	W	S	S
S	S	S	S
S	S	S	S
S	S		
S	S		
S	S		
S	S		
S	S		

PN 10	PN 16	PN 25	PN 40	DN
	PI	PI		80*
	PI	PI		100*
	PI	PI		125*
P	P	P	P	150
P	P	P	P	200
P	P	P	P	250
P	P	P	P	300
P	P	P	P	350
P	P	P	P	400
P	P	P	P	450
P	P	P	P	500
P	P	P	P	600
P	P	P	P	700
P	P	P	P	750
P	P	P	P	800
P	P	P	P	900
P	P	P	P	1000
P	P	P	K	1100
P	P	P	K	1200
P	P	P	K	1300
P	P	P	K	1400
P	P	K	K	1500
P	P	K	K	1600
K	K	K	K	1800
K	K	K	K	2000
K	K			2200
K	K			2400
K	K			2600
K	K			2800
K	K			3000

GOOD TO KNOW

*ROCO double eccentric butterlfy valves are cover the sizes DN 80-125 for PN 16 and PN 25 and differ from ROCO Wave.

E = EPDM rubberized disc. There is no need for an additional sealing ring.

PI = Pin connection between shaft and disc, see page 36.

SKG SLIDER CRANK GEARBOX

PERFECTLY ADAPTED TO THE VALVE DYNAMICS

ROCO Wave is equipped with a unique slider crank gearbox (SKG), which is the ideal solution for reliable opening and closing, as its movement kinematics are optimally adjusted to the needs of the ROCO Wave butterfly valve.
The high precision SKG gearbox is developed and manufactured at ERHARD.

- SYSTEM SAFETY
- ENERGY EFFICIENCY
- SUITABILITY FOR UNDERGROUND INSTALLATION

Standardized ISO Connections

The SKG gearbox input and output flange connections are standardized accoding to DIN ISO 5210/5211 allowing full flexbility for all actuation methods

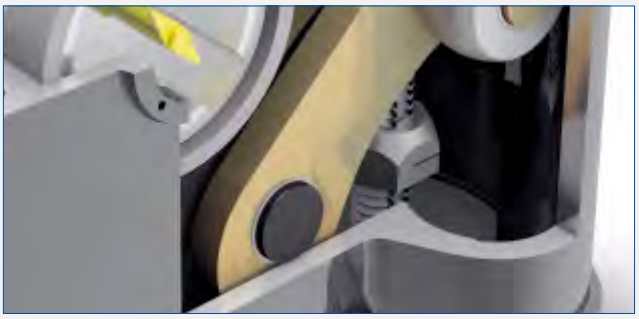

Adustable end stop on the spindle

The robust, adjustable end stop on the spindle ensures that no forces are being exerted on the housing parts during operation. The inner parts are made of bronze and stainless steel, ensuring a long life time.

Mechanical position indicator with sight glass

The mechanical position indicator with a pointer directly connected to the valve shaft is visible through a sight glass in the gear box. The sight glass is made of impact resistant polycarbonate (PC) and thus suitable for chamber or underground installations.

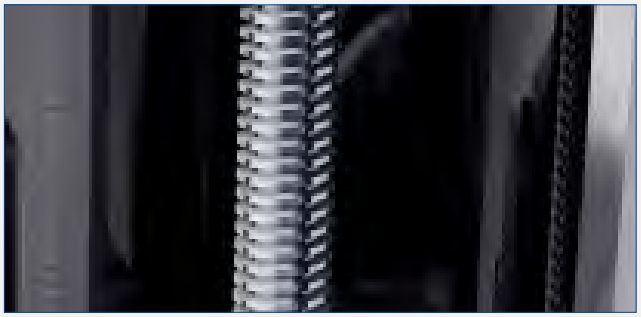

Self-locking mechanism

The SKG gearbox is characterized by a self-locking effect in any position thanks to a trapezoidal thread. It therefore has the advantage that it does not have to be secured separately in a resting position.

SYSTEM SAFETY BY TWO STEP CLOSING ACTION

The ERHARD SKG gearbox closes in two steps: the first 70% closes fast, the last 30% closes slowly to avoid water hammer.

Due to the lower closing speed near the "CLOSED" position, the gearbox with slider-crank mechanism ensures extremely soft closing, minimizing the danger of water hammer - a plus for safety and durability of all plant components.

There is a risk of water hammer whenever a valve is closed too fast, since the pressure increase is inversely proportional to the decrease of the flow velocity and can seriously damage the pipe system.

CLOSING OF THE VALVE

First 70 % of closing
- Non-critical area for possible water hammer
- Fast closing

Last 30% of closing
- Critical area for possible water hammer
- Slow closing

- **System safety by optimized torque curve**
  In contrast to a standard worm gear box, the ERHARD SKG gearbox does not have a constant torque curve for operating the disc. Instead, the torque rises disproportionately near the closing point pushing the main sealing reliably but still softly into its seat.
- **Energy efficient**
  The actuating torques are constantly low throughout the complete closing process, thus allowing the use of small and cost-effective electric and pneumatic actuators.

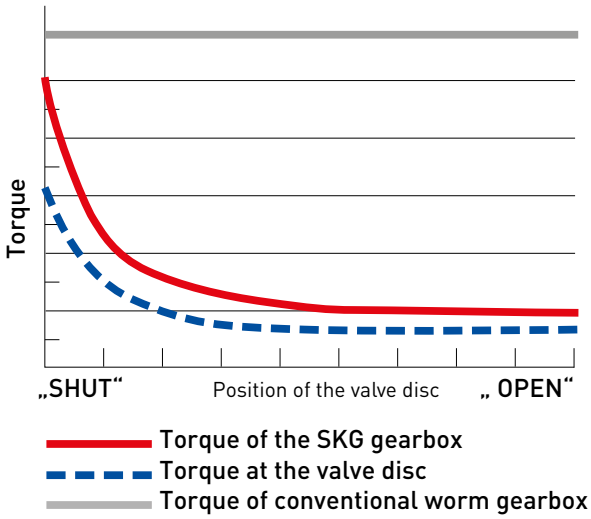

- **Optional: Switchmaster**
  The patented Switchmaster position indicator can be installed either with electro-mechanical micro-switches or inductive switches – switching directly or according to Namur.

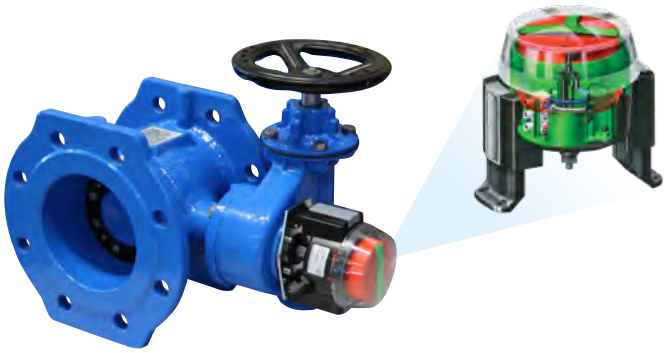


0377

COATING

PERFECT PROTECTION FOR EVERY FIELD OF APPLICATION

Corrosion protection for long lasting valves and clean water is a key technology of ERHARD butterfly valves.

We distinguish between two standard coating systems:

- EKB fusion bonded epoxy coating
- Pro-Enamel

Additionally, customized solutions adapted to the application are available upon request.

Epoxy coating represents the classic coating solution, being a proven technology suitable for the most common requirements. EKB is physiologically non-hazardous and has confirmed test certificates for drinking water, among others, from the DVGW Research Centre TZW Karlsruhe, from the Hygiene Institute of Gelsenkrichen and the WRAS (WRc) in Great Britain.

EKB FUSION BONDED EPOXY COATING

ERHARD works using the latest technologies and complies with the test conditions of the Quality Association for "Heavy Duty Corrosion Protection of Powder Coated Valves and Fittings" (GSK). The standard thickness is at least 250 µm, layer thicknesses up to 500 µm are possible.

ERHARD covers two coating processes for fusion bonded epoxy coating:

- Electrostatic powder coating in accordance with the GSK Quality Association (RAL-GZ 662).

  The epoxy resin coating provided in the powder coating process is one of the most often used corrosion protection processes. During this process, the coating is applied in a precisely defined thickness and melted on at exactly 210 °C.

- Wet electrostatic coating applying the liquid epoxy resin material directly on to the valve.

  With large valves, EKB is applied in a wet process in a two-layer structure:

  A cathodic basic protection is followed by an electrostatic wet coating using a low-solvent two component epoxy resin. In the heat channel, the final bonding takes place to the heavy corrosion protection according to DIN 30677-2.

EPOXY COATING AT THE ERHARD PLANT IN HEIDENHEIM/ GERMANY

COATING

ERHARD PRO-ENAMEL – MORE THAN JUST A COATING

SMOOTH SURFACE

PHYSICAL BONDING

MAXIMUM RESISTANCE

ERHARD valves with vitreous enamel have been successful on the market for many decades. A modern enamelling plant in the ERHARD factory in Heidenheim, Germany, extensive experience and comprehensive process know-how for this technology enable high-quality production. ERHARD Pro-Enamel is DVGW approved and complies with KTW requirements.

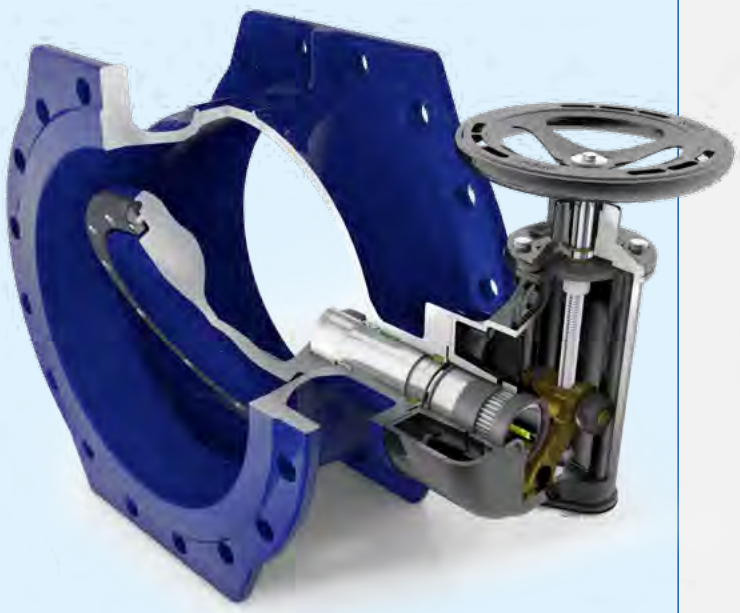

Smooth surface grants safety for drinking water and long valve life-time
The flow of the enamel material during the melting process produces an extremely smooth surface (Ra 0,05), far smoother than could be achieved with conventional machining, ensuring perfect hygienic conditions. Mineral constituents in the water, as well as microorganisms find it extremely difficult to settle on the valve. Thus, hard water does not cause calcification leading to a failure of the valve mechanism.

Physical bonding ensures highly reliable corrosion protection
Vitreous enamel does not sit on the cast iron as a separate layer, as is the case of powder or wet paints. Instead, it physically and chemically bonds with the base material, building an iron-enamel-composite material.This composite material reliably protects the valve against creep corrosion and cracking, even if the valve is mechanically damaged. Additionally, it is absolutely impervious to water vapour and oxygen.

Superior raw casting
The basis for perfect enamelling according to the DIN 51178 standard is the appropriate metallic substrate. Only flawless cast iron of the highest quality can be used for enamelling. The raw material needs to be free of pores and with a smooth surface. Perfect bonding during firing only occurs with this exact mix of iron, carbon, silicon, manganese and other elements.

Maximum resistance for a wide range of use
Enamelled valves have outstanding resistance to acids, alkalis and neutral organic media. They have a temperature resistance for water up to 60°C and are suitbale for sudden temperature changes. With a hardness of 600 HV (scratch hardness min. 4 according to Mohs) enameled valves are suitable for abrasive media, immune to the effect of sand or gravel in the water. They are weather resistant: no embrittlement or changing colour when exposed to UV radiation, and aggressive sea or industrial atmospheres do not harm the enamel coating.

Countersealing without the need for a steel ring
ERHARD Pro-Enamel with its smooth surface and hardness is the ideal countersealing surface for elastomer seals. The sealing ring on the disc closes directly on the smooth vitreous enamel, without the need for an additional stainless steel ring. This reduces the initial operating forces and facilitates opening and closing. In addition, the seal geometry is retained for a long time due to the extremely low friction wear. Thus, the seals have to be replaced less frequently, and the surface touched by the medium is not changed.

A GLIMPSE INTO THE ERHARD ENAMELING PROCESS

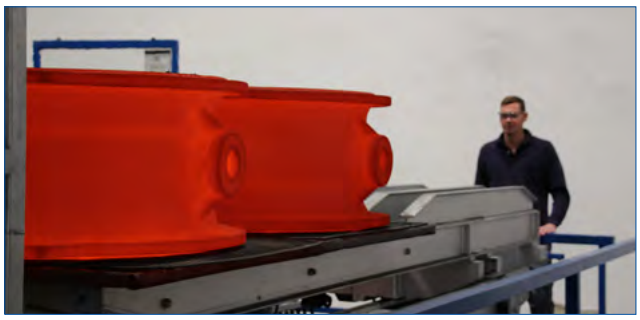

1 Degassing Annealing at 850 °C

The enamel process begins with the degassing annealing in the first firing furnace.

2 Abrasive blasting achieves bright and clean surface

Before it can be enamelled, the valve must be bright and free of dust and grease. It must also have a certain roughness, which is achieved by bright abrasive blasting.

3 The enamel slurry is sprayed onto the metal

The slurry is then applied by spraying, or on internal surfaces using a special centrifugal process, which ERHARD developed for this purpose. The coat thickness of 250 µm, the defined industrial standard, is applied.

4 After it has been fired in the furnace at over 700 °C, the desired vitreous, high-strength enamelling is created.

Two furnaces ensure that the firing process takes place with precisely defined temperatures and times and suitable rooms are available for the cooling in draught-free ambient air.

ENAMEL VARIANTS

DN 150-1200 PN 10/16
DN 150-900 PN 25

A

Full enamel coating

Long lasting full protection against aggressive media and demanding environments.

DN 150-1600 PN 10/16
DN 150-900 PN 25

B

Enamel inside, epoxy outside

Smooth surface inside with protection against limescale and high resistance to aggressive media.

DN 150-1600 PN 10/16
DN 150-900 PN 25

C

Enameled body inside

Enamel coating on the inside protecting against sediments, disc and outside are epoxy coated. Provides a good balance of quality, safety and economics.

FOR A PERFECT CONNECTION: LOOSE FLANGE

The ERHARD ROCO Wave double eccentric butterfly valve with loose flange combines all benefits of the ROCO Wave with a tension-resistant loose flange. It is the ideal valve for renovation of plants and networks.

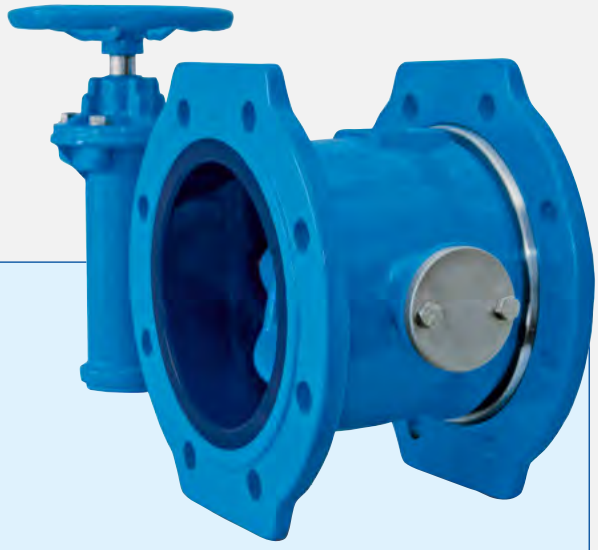

- EASY INSTALLATION AND EXCHANGE
- OFFSETTING FOR MISALIGNED PIPE
- NO NEED FOR A DISMANTLING JOINT

CHARACTERISTICS

- The loose flange has an axial clearance range of -1 mm to +5 mm and is connected tension-proof to the valve body.
- Valve is effectively 3 mm shorter and can thus be easily fit into the existing gap of a valve to be replaced.
- Easy to maintain and replace without removing by force or with special tools.
- No adjusting and extension pieces required.
- The valve is locked against rotation by being fitted and mounted to the fixed flange side.
- The flange gasket is integrated in the loose flange, which allows additional play of 2 mm.
- SKG slider crank gearbox with handwheel (other actuation types upon request)

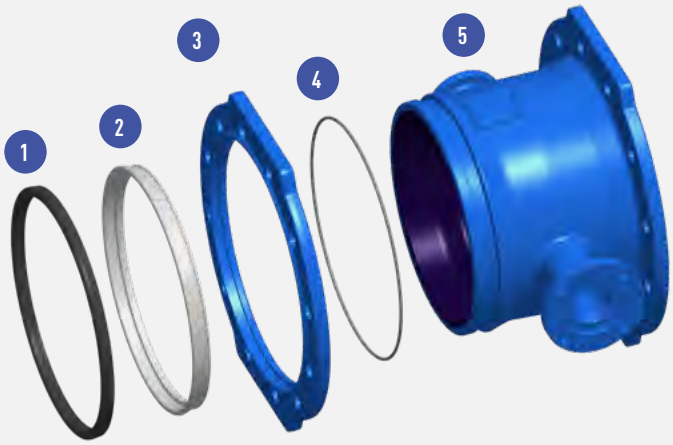

1. EPDM Sealing ring
2. Retaining ring 1.4301
3. Loose flange
4. EPDM O-Ring
5. Valve body

TECHNICAL DATA

- **Double eccentric butterfly valve** design standard DIN EN 593.
- **Basis face-to-face dimension** EN558 series 14. Axial clearance: -1 to +5 mm
- **Sizes** DN 150-400 PN 10 and PN 16 DN 500 PN 10
- **Flange Drilling** PN 10 to PN 16 acc. to EN 1092-2.
- **Coating:** Body outside and disc epoxy 250 µm GSK, inside enamel
- **DVGW Approval**

INSTALLATION LENGTHS

DN	PN	Length range mm	Weight kg
200	10	229-235	48
250	10	249-255	61
300	10	269-275	93
350	10	289-295	101
400	10	309-315	148
500	10	349-355	215
200	10	229-235	47
250	10	249-255	62
300	10	269-275	93
350	10	289-295	102
400	10	309-315	148
500	10	349-355	216

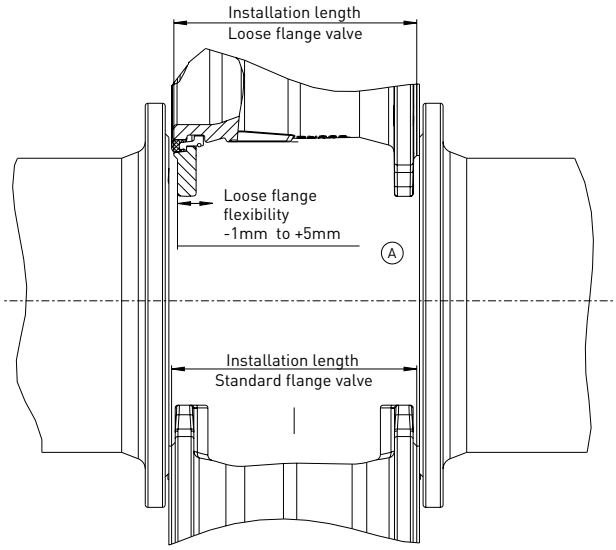

WHY A LOOSE FLANGE DESIGN?

BENEFITS WHEN REPLACING AND REPAIRING:

- No special tools required to force the pipe apart.
- Balancing of axial pipe misalignment in the flange boreholes.

BENEFITS IN NEW CONSTRUCTION PROJECTS:

- No installation of adjusting and extension pieces.
- Reduced installation time of around one third.
- Reduced number of connections.

REPLACEMENT OF A GATE VALVE WITH BUTTERFLY VALVE WITH LOOSE FLANGE.

EASY INSTALLATION IN VERTICAL PIPELINES.

THE VALVE CAN BE TURNED AFTER INSTALLATION INTO ITS FINAL POSITION.

INSTALLATION OF A ROCO WAVE LOOSE FLANGE VALVE

The loose flange is moveable within a range of -1 mm to +5 mm.

For installation, the valve is positioned and the loose flange is pulled towards the valve.

The body is manufactured with negative tolerance resulting in a gap between the valve and the pipe. This permits simple installation into the existing gap with an overall length according to EN 558, series 14.

After placing the valve into the gap, the loose flange with integrated sealing is pulled up to the pipe flange and the flange connection is screwed down tightly, thus closing the gap.

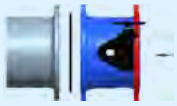

POSITIONING THE VALVE

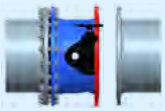

INSTALLATION ON FIXED FLANGE SIDE

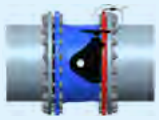

PULL LOOSE FLANGE TOWARDS THE PIPE

ENGINEERED TO **PERFECTION**

ROCO WAVE Double eccentric butterfly valve

FOR MORE THAN 70 YEARS, ERHARD HAS PROVIDED BUTTERFLY VALVES OF THE HIGHEST QUALITY.

ROCO WAVE OFFERS OUTSTANDING FEATURES FOR A SUSTAINABLE FUTURE

- TRUST THE EXPERT.

Designed to meet highest demands in terms of performance and versatility for a wide variety of applications – Quality Made in Germany.

EFFICIENCY

Patented disc and seat design combines robustness, even under the highest dynamic loads with the best hydraulic performance for optimum energy efficiency and savings. ROCO Wave has been the benchmark for the best Kv values for years.

PRECISION

The patented polygonal plug connection of shaft and disc is free of play, transmits the torque without loss and ensures an uninterrupted corrosion protection.

The SKG gearbox protects against water hammer damage.

EXPERTISE

For customized solutions, trust the expertise of ERHARD for safety valves and high pressure solutions. In addition to the specialization in enameling and GSK coating, we provide special coating solutions for every application.

TALIS

ERHARD RANGE

www.talis-group.com

TALIS

ROCO WAVE Double eccentric butterfly valve

Flow optimized design

MINIMIZED HEAD LOSS

- Highest stability for demanding operating conditions
- Patented profile and diameter ensure max. hydraulic efficiency
- Low energy consumption

Sealing ring

PROVEN DESIGN

- One piece, fully EPDM rubberized profile sealing ring for DN 150-600
- For other sizes EPDM sealing ring is fixed by a retaining ring
- Easy maintenance

Polygon shaft

IDEAL TORQUE TRANSMISSION

- Patented design, free of play
- No additional connecting elements, closed disc eyes
- Uninterrupted corrosion protection for clean water

SKG slider crank gearbox

PREVENTS DAMAGE FROM WATER HAMMER

- Two step closing action
- Self-locking mechanism
- Adjustable end stop on the spindle

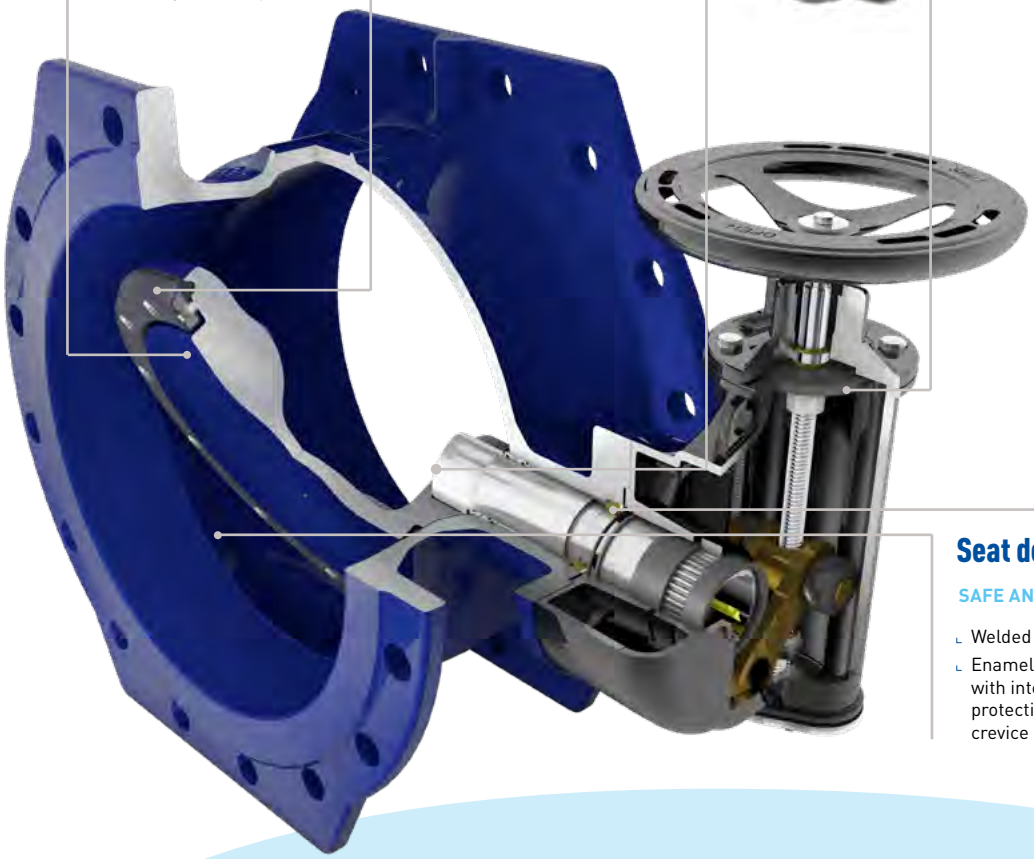

Shaft sealing design

SAFE AND TIGHT

- Maintenance-free self-lubricating bushes
- POM O-ring cages serve as bearing, sealing and corrosion protection
- Safety circlip protects against blow-out

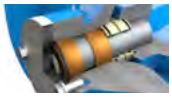

Seat design

SAFE AND EFFICIENT

- Welded seat ring
- Enameled valves with integral seat protecting against crevice corrosion

ISOLATION VALVES

INFINITY RESILIENT SEATED GATE VALVE

BALL VALVE

ERU® K1 KNIFE GATE VALVE

COMPLEMENTARY PRODUCTS

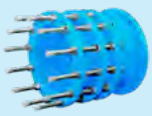

DISMANTLING JOINT

ERK CHECK VALVE

ERHARD RANGE

www.talis-group.com

TALIS

TALIS

SAFETY FIRST

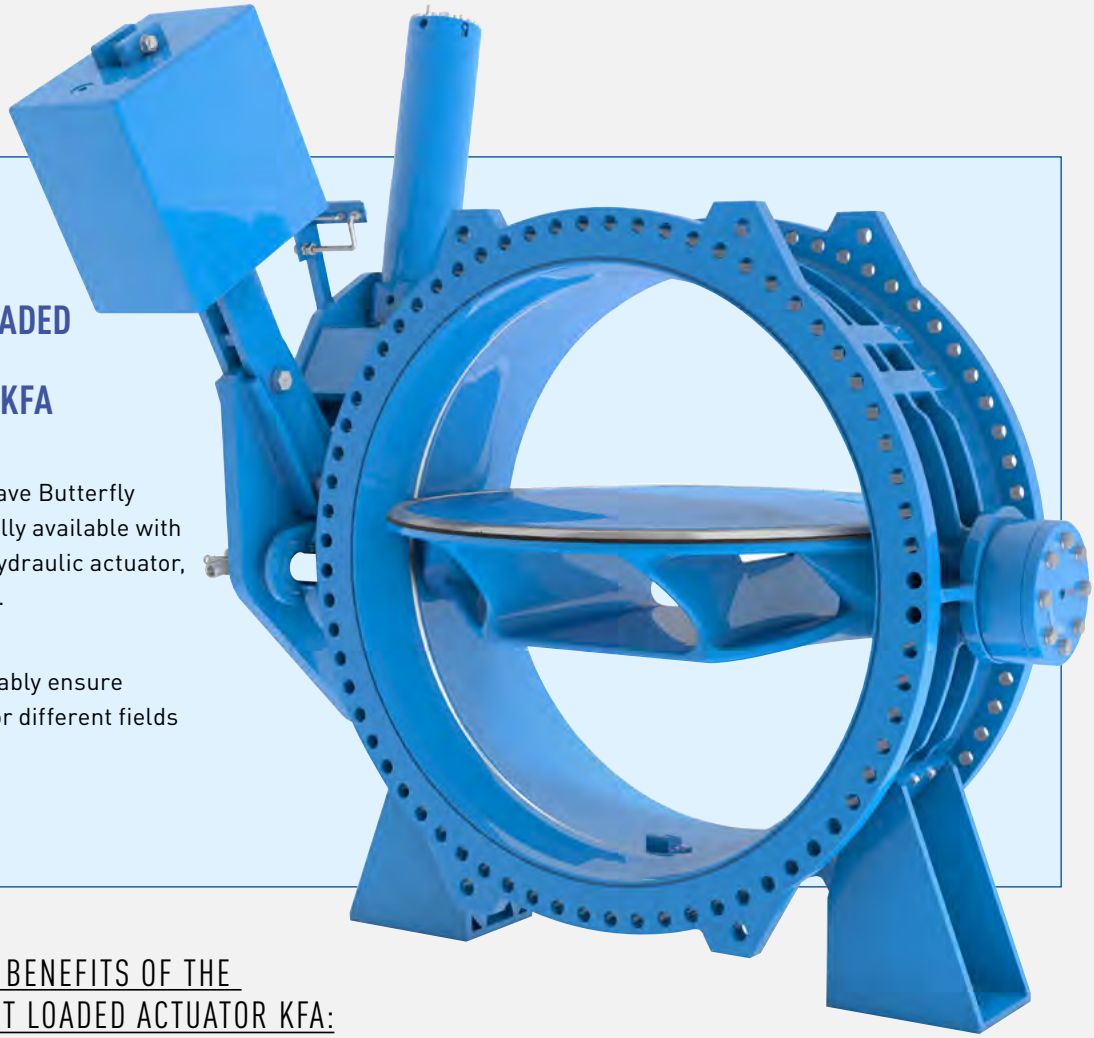

WEIGHT LOADED ACTUATOR KFA

ERHARD ROCO Wave Butterfly Valves are optionally available with a weight-loaded hydraulic actuator, compact type KFa.

This way, they reliably ensure safety functions for different fields and applications.

FEATURES AND BENEFITS OF THE ERHARD WEIGHT LOADED ACTUATOR KFA:

- **Standard closing action with two phases, each adjustable**
  First 70% fast closing, reminaing 30% stongly throttled
  Avoidance of pressure surges
  Performance adjustable for each phase by means of high-quality solenoid valves
  Optionally, one or three-phases operating, depending on the application requirement
- **Compact design with incorporated hydraulic unit, thermal switch and pressure limiting device**
  No need to provide any additional hydraulic components
  No additional piping
  The valve operates with a fully independent hydraulic system
- **High-grade corrosion protection**
  Actuator unit with ERHARD epoxy coating
  Valves and accessories made of stainless steel
- Safety devices as e.g. pressure limiting and temperature monitoring devices are incorporated in the standard actuator

FURTHER OPTIONS

As a package solution for the compact weight-loaded hydraulic actuator KFa, ERHARD optionally offers:

- Measuring detectors/transducers, flow rate measuring systems – inductive, ultrasonic or on a mechanical/hydraulic basis
- Electrical control cubicle with all the components necessary for control/ regulation
- Assembly, installation, and commissioning of all components with corresponding after-sales service and customer support

EXAMPLES OF APPLICATION OF WEIGHT-LOADED ACTUATORS KFA

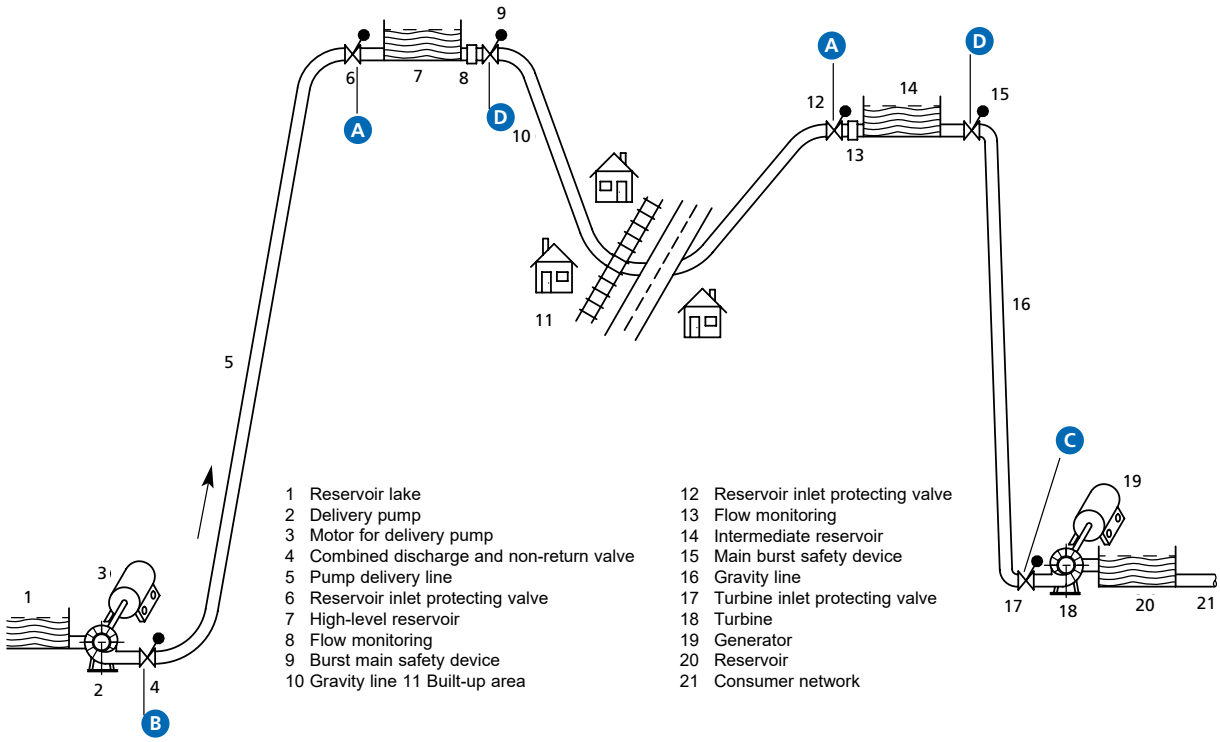

A Overflow safety device (inlet and outlet of reservoirs)

Security of reservoirs by preventing unacceptable emptying in case of pipe burst or for protection in case of failure of the inlet control valve. It is possible to combine weight-loaded hydraulically operated valve with inlet/outlet valve.

B Combined controlled discharge and pump non-return Valve

Combined function (starting pumps in a controlled manner and non-return function) in one valve.

Advantages as compared to freely swinging non-return valves:

- Due to controlled full opening during pump operation, there is very little stress on seals and bearings
- Full opening ensures optimal economical operation
- The actuator helps to start the pump smoothly
- Closing slams of the disc are prevented by the two phase closing action

C Turbine inlet safety valve (emergency isolating valve)

Safety valve directly installed at the turbine inlet. It is used as safety valve for quick closing in case of sudden load rejection, avoiding unacceptably high speed (runaway speed) of the turbine and water hammer phenomena, which might be caused thereby. In a lot of plants, weight-loaded hydraulic actuators are also used in the by-pass, acting as quick-opening devices in order to open synchronously to the closing of the inlet valve in a neutral manner as far as flow rate is concerned.

D Burst main control valve

Safety valve for control of pipe systems, for protecting buildings, traffic routes, etc. Safe closing function must be ensured in case of a possible burst main.

SAFETY FIRST

NON-RETURN PROTECTION

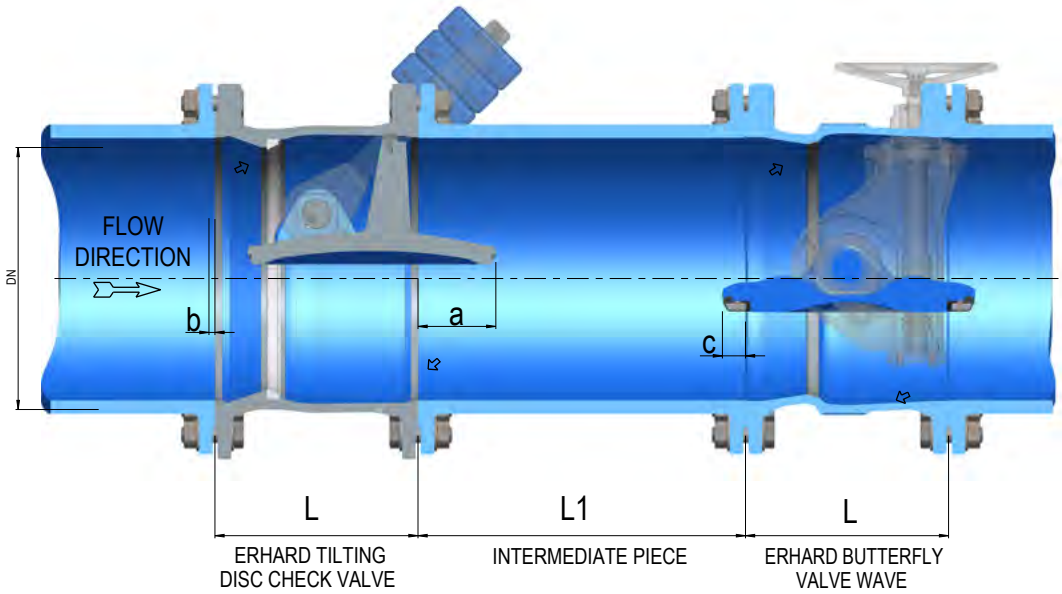

NOTE: INSTALLATION WITH LEVER AND WEIGHT OF ERHARD CHECK VALVE LEFT IN FLOW DIRECTION AND GEARBOX OF BUTTERFLY VALVES RIGHT IN FLOW DIRECTION TO AVOID COLLISION OF COUNTERWEIGHT AND GEARBOX

For special applications like manifolds with parallel pumps or ascending lines, butterfly valves from DN 150 can also be combined with a suitable non-return protection.

ERHARD Check Valves are manufactured in accordance with the same high standards. With stable housings, a streamlined tilting disc, shafts brought out to both sides and mounted maintenance-free, as well as a robust wedge connection between shaft and disc, the butterfly valves represent the perfect supplement to ERHARD ROCO Wave.

DN	L	L1	a	b	c
150	210	-	-	-	-
200	230	150	20	-	-
250	250	150	45	-	-
300	270	150	70	9	-
400	310	225	118	41	-
500	350	300	165	63	-
600	390	400	215	95	-
700	430	500	260	10	120
800	470	600	315	15	150
900	510	650	360	30	180
1000	550	750	410	40	210
1100	590	800	455	55	225
1200	630	900	515	50	270
1300	670	1000	560	60	295
1400	710	1100	615	70	320
1500	750	1200	660	80	360
1600	790	1300	705	90	385
1800	870	1400	815	110	445
2000	950	1600	915	130	505

ERHARD THREE-POINT LOCKING

Accidental opening of the butterfly valve in case of revisions of the pipeline system is safely and reliably prevented due to the ERHARD three-point locking system. This guarantees that the butterfly functions as a locked and drip-tight closed safety valve. Inspection of the pipeline can take place without danger even in case of an operating error on the drive.

The locking device consists of two fixed and one movable end stop. At the movable end stop, a pin operated by a hand wheel drives into the housing, blocking reliably the closed tilting disc. In this position, the valve is closed drip-tight in both pressure directions. An additional mechanical locking of the pin in the end positions serves as another safety feature. Unintentional opening and closing of the locking is thus effectively prevented. Furthermore, the locking is dimensioned in such a way that it withstands the maximum occurring actuating moment from drive and valve at any time. Even if the drive shafts fail, the valve remains safely closed and thus provides the highest degree of safety. Further blocking versions are available on request.

THE PIN POSITIONS OF THE THREE-POINT LOCKING CAN OPTIONALLY BE EQUIPPED WITH LIMIT SWITCHES. CORRESPONDING SIGNALS CAN BE PROCESSED FOR VISUALISATION AND CONTROL.

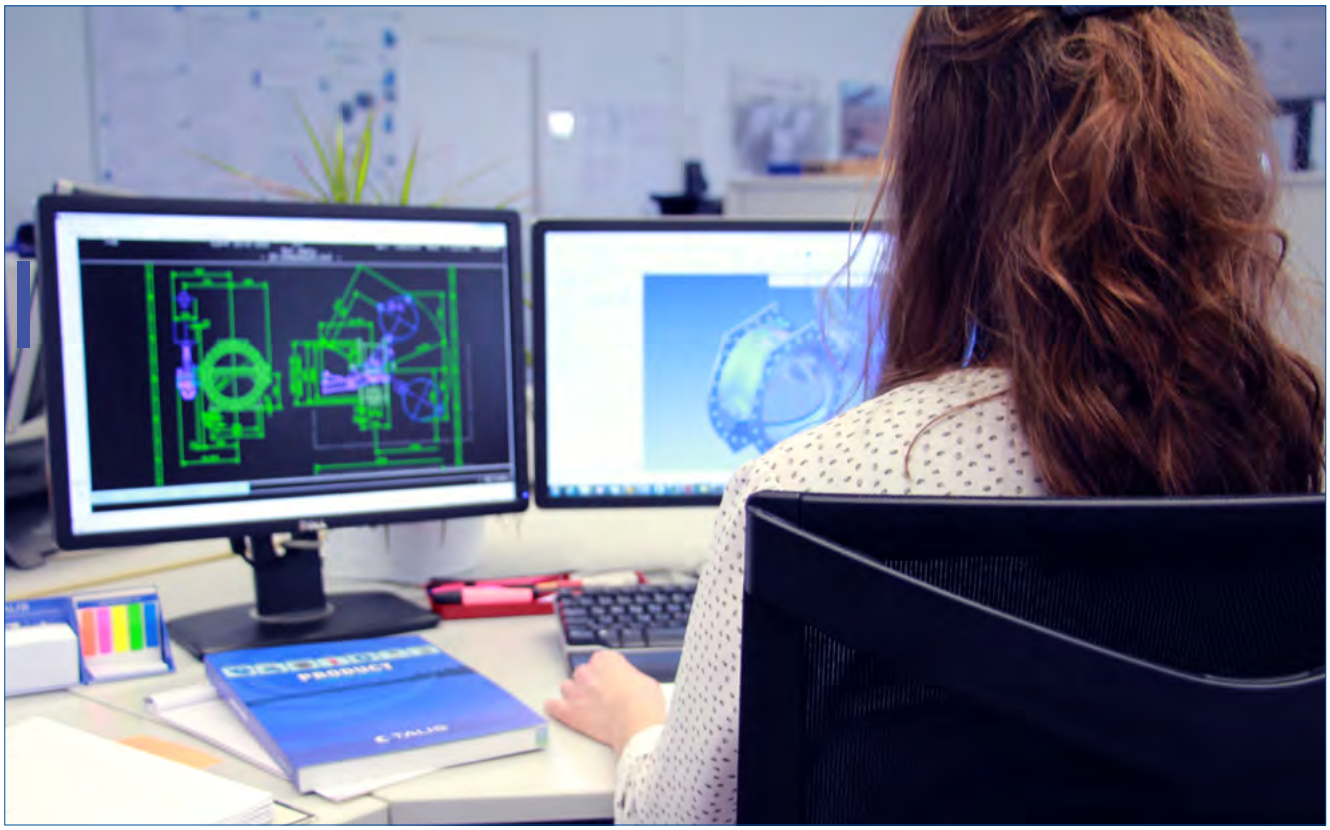

THE ERHARD ENGINEERING DEPARTMENT DEVELOPS RELIABLE SOLUTIONS TO THE MOST DEMANDING REQUIREMENTS

ENERGY EFFICIENCY

DESIGNED FOR BEST HYDRAULIC PERFORMANCE

ERHARD double eccentric butterfly valves contribute to an overall optimized system in transport and hydropower applications for lowest consumption of energy.

Key figures are Kv and ζ (zeta) values:

- The Kv-factor of a valve indicates the water flow in m³/h at a pressure drop across the valve of 1 kg /cm2 at 5-30°C when the valve is 100% open.
- The head loss coefficient ζ (zeta), also referred to as pressure loss coefficient or resistance coefficient is a dimensionless measure in fluid mechanics reflecting the resistance in a certain hydraulic element. This resistance depends on the geometry of the system.
- The zeta value can be derived from the Kv value and vice versa.
  High Kv factors and low zeta values mean reduced pressure losses and thus, smaller pump capacities.

DN	PN 16		PN 10	
	Kv m³/h	ζ (zeta)	Kv m³/h	ζ (zeta)
80	216	1.39	-	1.39
100	423	0.89	-	0.89
125	826	0.57	-	0.57
150	1,010	0.78	1,018	0.78
200	1,880	0.71	1,897	0.71
250	3,800	0.42	4,283	0.42
300	4,150	0.4	6,168	0.34
350	8,000	0.37	8,937	0.3
400	10,900	0.34	12,304	0.27
450	14,200	0.31	16,183	0.25
500	18,250	0.29	20,830	0.23
600	28,000	0.26	32,166	0.2
700	40,500	0.23	46,150	0.18
800	55,100	0.21	63,934	0.16
900	74,000	0.19	83,570	0.15
1000	93,338	0.18	110,825	0.13
1200	142,516	0.16	166,104	0.12
1400	194,040	0.16	226,086	0.12
1600	261,751	0.15	295,296	0.12

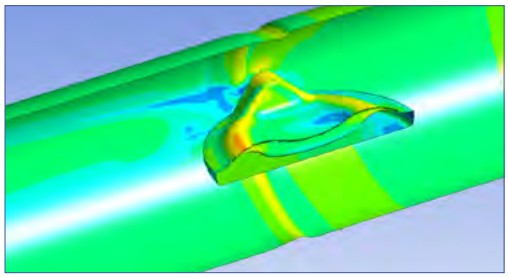

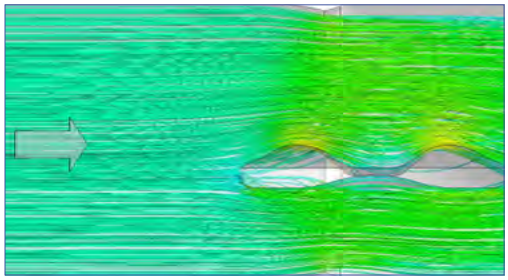

FLOW SIMULATION (CFD) TO determine the head loss coefficient in the open position

$$K_v = \frac{Q}{\sqrt{\Delta p}} \qquad \zeta(zeta) = \frac{d^4}{626{,}3 \cdot {K_v}^2}$$

Kv-factor is defined in VDI/VDE Richtlinien No. 2173
Q = Water flowrate
Δp = Differential pressure
d = Nominal diameter
v = Flow speed

ERHARD double eccentric butterfly valves are designed according to EN 593 for the following maximum flow velocities:

PN10: 3m/s
PN16: 4m/s
PN25: 5m/s
PN40: 6m/s

Valves for higher flow velocities are available on request, especially for dams and hydropower applications when the valve is used as safety valve.

ACTUATION

OVERVIEW OF ACTUATION METHODS

The actuation design is always adapted to the application and specific need.

WITHOUT FLANGES - FOR ACTUATION WITH CAPTOP, HANDWHEEL OR EXTENSIONS

Gearbox with round spigot

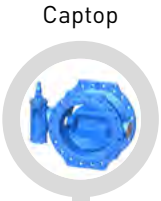

Captop

Handwheel

Variety of extensions, also for underground use and according to GW336

VALVE WITH BARE SHAFT

Weight loaded actuator (no gearbox)

Electric actuator (1/4 turn) actuator (no gearbox)

Gearbox prepared for actuation

Electric actuator (multiturn)

Hydraulic actuator

Pneumatic actuator

FLANGED CONNECTION ACC. TO DIN ISO 5210 - PREPARED FOR ACTUATOR

MODULAR ACTUATION CONCEPT - GEARBOX MANAGEMENT

ERHARD double eccentric butterfly valves are tight in both directions and can be installed in all positions, according to ERHARD drawing no. 4D111222.
All patterns are also suitable for installation in vertical pipes. If the flow against the valve is always from one side, then side A is to be preferred.

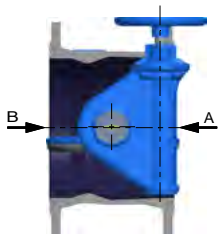

PATTERN 1

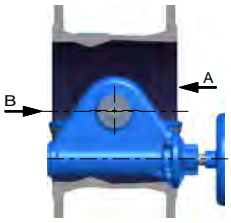

PATTERN 2

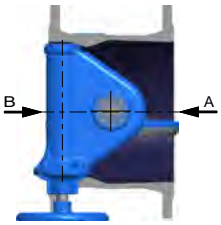

PATTERN 3

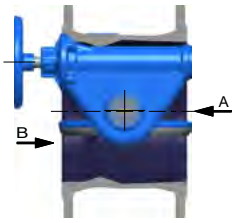

PATTERN 4

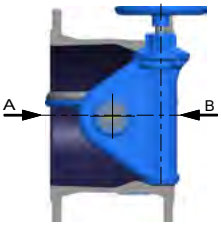

PATTERN 5

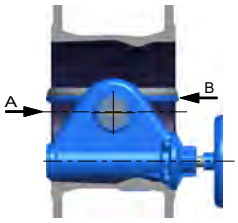

PATTERN 6

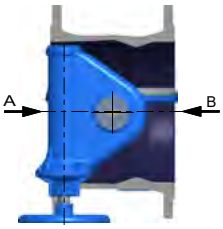

PATTERN 7

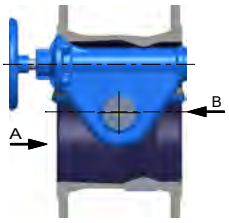

PATTERN 8

A → Direct side

B → Indirect side

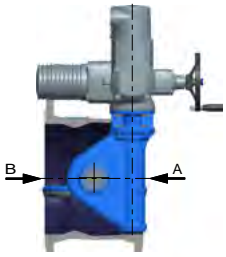

PATTERN 1

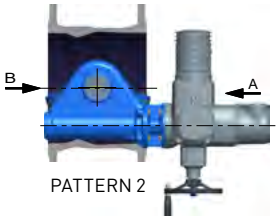

PATTERN 2

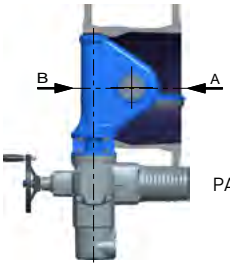

PATTERN 3

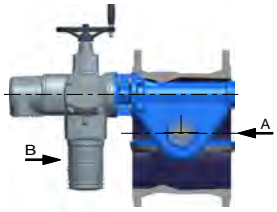

PATTERN 4

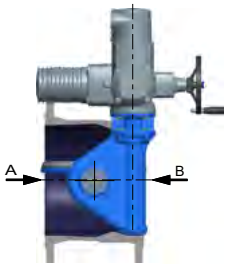

PATTERN 5

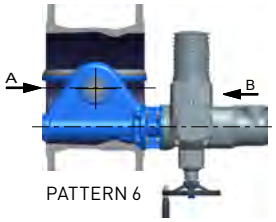

PATTERN 6

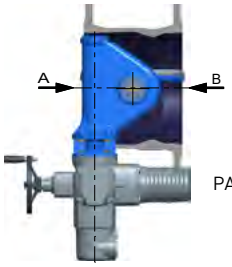

PATTERN 7

PATTERN 8

QUALITY AND TESTING

- Without exception, 100% of ERHARD valves are tested according to DIN EN 12266, or as per customer requirements. Additionally, ERHARD conducts tests above industry standards.
- Type tests are conducted according to DIN EN 1074 (2500 cycles endurance resistance).

Testing pressures

Pressure values of testing / body test			
	PN 6	PN 10	PN 16
acc. EN 12266	9 bar	15 bar	24 bar
acc. EN 1074	12 bar	17 bar	25 bar

Testing durations

Duration values of testing / body test		
DN of valves	EN 12266	ERHARD
≤ DN 150	60 s	300 s
DN 150 - DN 300	120 s	300 s
DN 350 - DN 500	300 s	300 s
> DN 500	300 s	600 s

APPROVALS

A cutting-edge traceability system applied from the reception of raw material to product supply, together with an exhaustive control of processes, guarantees the top quality of our products.

ERHARD valves are suitable for potable water and they are approved by the most prestigious organisations all over the world.

CERTIFIED PROCESSES

In addition, the TÜV certification according to DIN EN ISO 9001 and industry-specific certifications guarantee the highest quality and efficiency of all ERHARD processes and thus also of our valves.
(DIN ISO 9001:2015; DGRL 2014/68/EU Modul H; KTA 1401; AD-WO/2014/68/EU)

PREQUALIFICATIONS AND AUDITS

- ERHARD is prequalified at renowned utility companies such as Thüga, innogy, Berliner Wasserbetriebe and Bodensee-Wasserversorgung.
- Country registration procedures such as SPAN (Malaysia) and yearly audits such as for IGH (Croatia) and BULGARKONTROLA (Bulgaria) are part of our Quality Management routine.
- Regular audits according to customer specifications demonstrate suitability in terms of quality, know-how and performance.

OWN RESEARCH INSTITUTE

ERHARD has the infrastructure to test the quality of its products and validate the results directly. Testing grounds, laboratories and immediate testing results for our product engineering processes on site, enable us to provide the highest quality of our products. In our own research institute at ERHARD, we can test valves up to DN 1200. E.g. we can measure and carry out flow characteristics, endurance tests, corrosion tests, torque detection and much more.

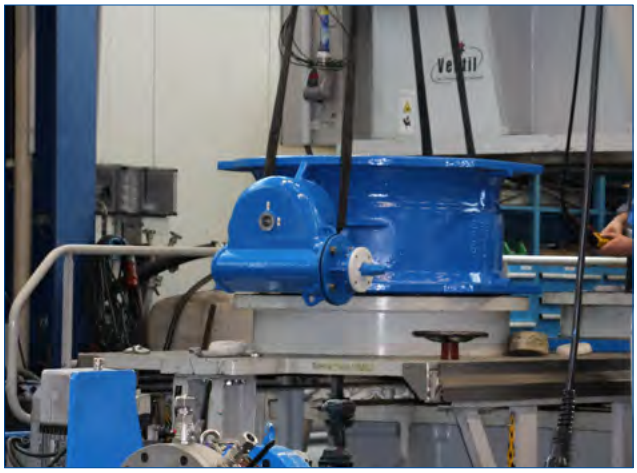

MAIN COMPONENTS

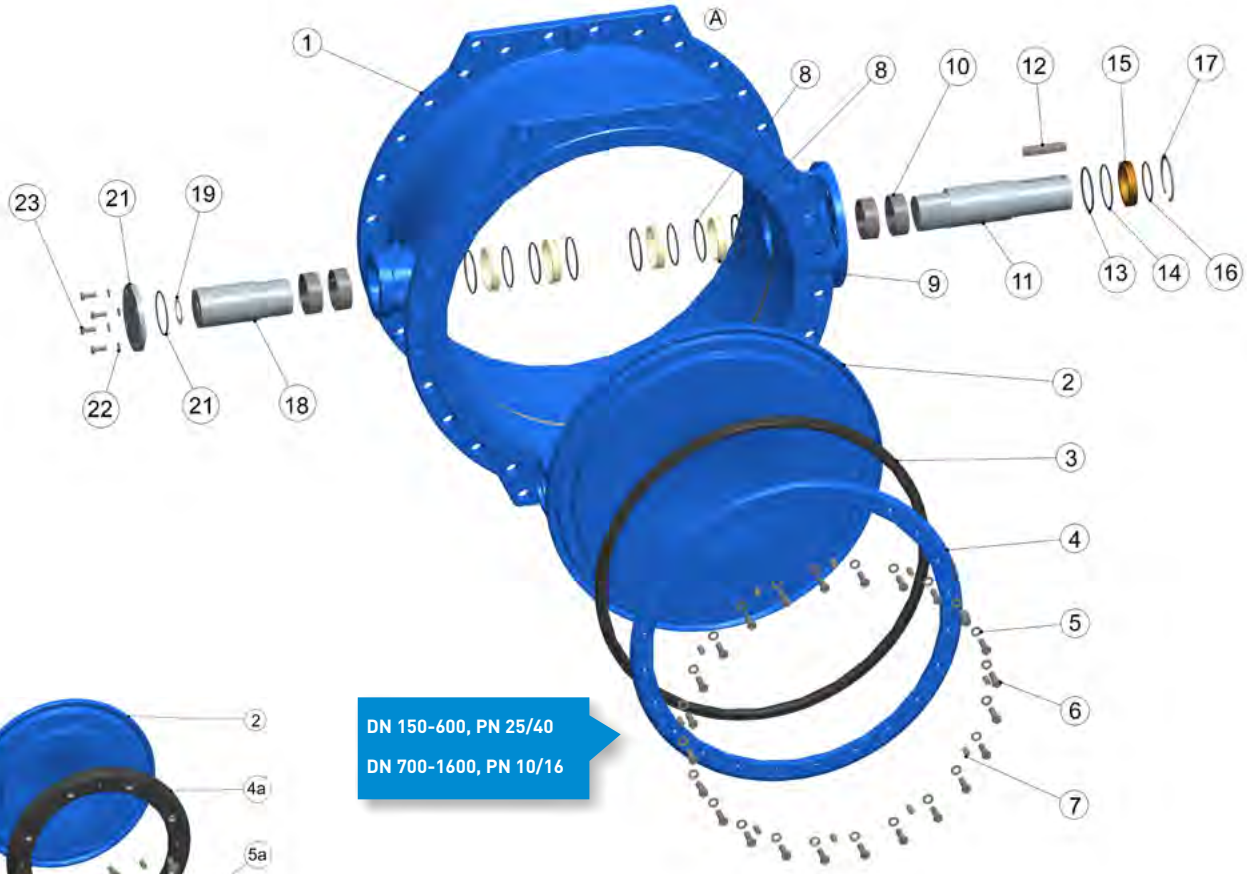

DN 150-600, PN 25/40

DN 700-1600, PN 10/16

DN 150-600, PN 10/16

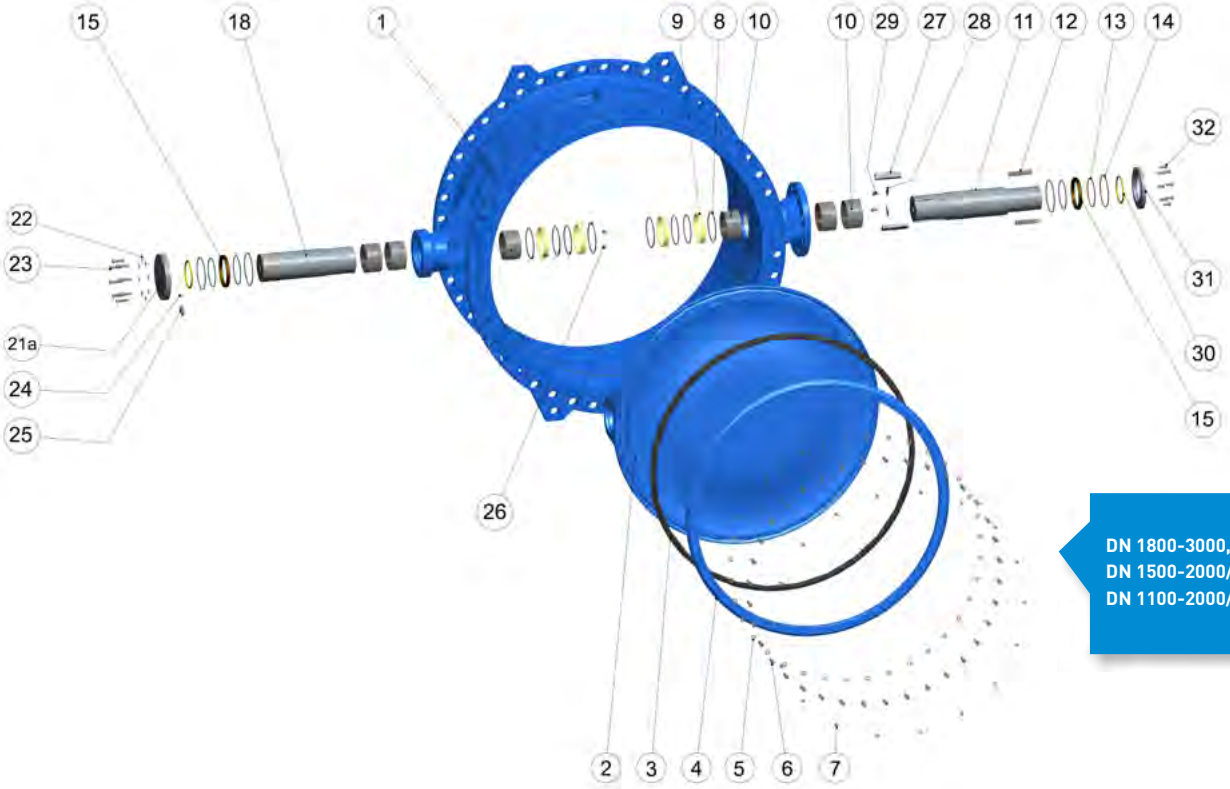

DN 1800-3000, PN 10/16
DN 1500-2000/PN 25
DN 1100-2000/PN 40

MAIN COMPONENTS

Pos.	Description	Material - Standard			Optional	Spare Part	Water contact
	Range	DN 150-600 PN 10/16	DN 150-600 PN 25/40	DN 700-3000			
1	Body	EN-GJS-400-15			EN-GJS-500-7, EN-GJS-400-18-LT		x
	Welded seat	2.4806					x
	Integral seat area for enamel variants A, B, C, see page 19						x
2	Disc	EN-GJS-400-15			EN-GJS-500-7, EN-GJS-400-18-LT		x
	Coating body and disc	Epoxy GSK 250 µm			Enamel (PN10/16) EPC, Hard rubber		x
3	Profile ring	-	EPDM		NBR, FKM (Viton)	x	x
4	Retaining ring		S235JR epoxy coated		1.4301*, 1.4571		x
5	Washer		A4	A2	A4		x
6	Screw		A4	A2	A4		x
7	Threaded pin		A4	A2	A4		x
4a	Profile sealing ring	Steel, EPDM rubberized	-			x	x
5a	Screw	A4				x	x
6a	Threaded pin	A4				x	x
8	O-ring	EPDM			NBR, FKM (Viton)		x
9	Seal ring cage	POM					x
10	Slide bush	P1 - Self-lubricating steel, PTFE coated					
11	Shaft	1.4021 +QT800			1.4057, 1.4462		x
12	Parallel key	C45					
13	O-ring	EPDM			NBR, FKM (Viton)	x	
14	O-ring	EPDM			NBR, FKM (Viton)	x	
15	Cage	Cast bronze CC483K				x	
16	O-ring	EPDM			NBR, FKM (Viton)	x	
17	Circlip	Spring steel				x	
18	Trunnion	1.4021 +QT800			1.4057, 1.4462		x
19	Thrust washer	POM				x	
20	O-ring	EPDM			NBR, FKM (Viton)	x	
21	Bearing cover	1.4301					
21a	Bearing cover	S235JR epoxy coated			1.4301		
22	Washer	A2			A4		
23	Screw	A2			A4		
24	Washer	A4					x
25	Eyebolt	A4					
26	Threaded pin	EN-GJS-500-7					
27	Wedge key	1.4057 +QT800					
28	Lock washer	1.4571					x
29	Screw	A2			A4		x
30	Gauge ring	Cast bronze CC493K					
31	Support ring	1.4057 +QT800				x	
32	Screw	A2			A4	x	

*Standard for enamel variant B, see page 19

MAIN COMPONENTS

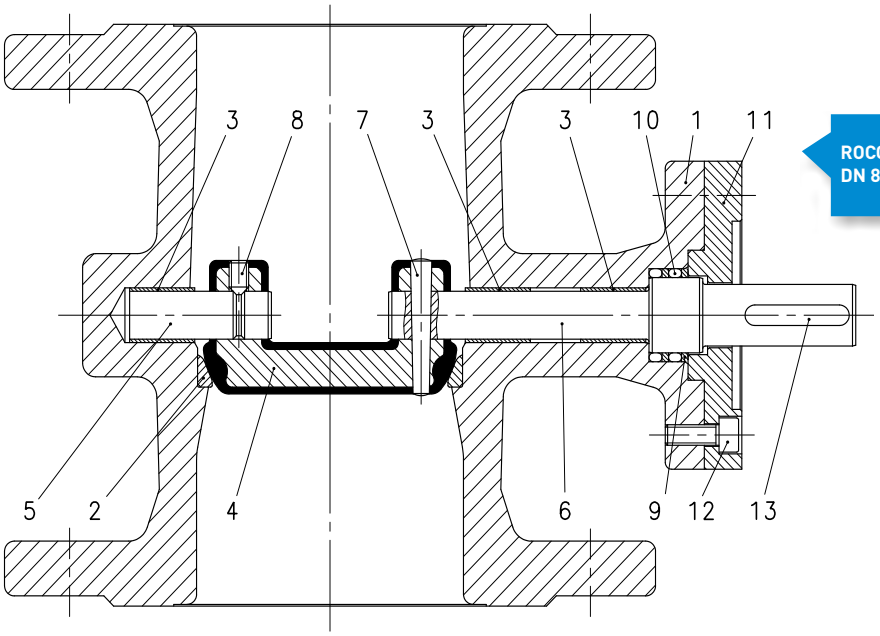

ROCO
DN 80-125, PN 16/25

Pos.	Description	Material - Standard ROCO	Spare Part	Water contact
	Range	DN 80-125, PN 16/25		
1	Body	EN-GJS-400-15		x
	Coating body	Epoxy GSK 250 µm		x
2	Seat ring	1.4308		x
	Integral seat area for enamel variants			x
3	Bearing bush	P1 - Self-lubricating steel, PTFE coated		x
4	Disc	EN-GJS-400-15		x
	Coating disc	EPDM		x
5	Trunnion	1.4057		x
6	Shaft	1.4057	x	x
7	Taper pin	1.4122		x
8	Threaded pin	A4		x
9	Back-up ring	PTFE GF15		
10	O-ring	EPDM		x
11	Intermediate flange	Steel, epoxy coated	x	
12	Cylinder screw	A4	x	
13	Parallel key	E335GC	x	

DIMENSIONS AND WEIGHTS

DOUBLE ECCENTRIC BUTTERFLY VALVE WITH HANDWHEEL

DN	PN	Weight Kg	K mm	D mm	d2 mm	e1 mm	e2 mm	e3 mm	e5 mm	e6 mm
ROCO										
80	16	23	200	160	200	100	167	229	85	148
100	16	27	220	180	200	110	182	244	85	148
125	16	31	250	210	200	125	195	257	85	148
ROCO Wave										
150	16	36	240	285	200	155	201	301	85	185
150	25	44	250	300	200	169	221	321	85	185
150	40	48	250	300	200	169	221	321	85	185
200	10	48	295	340	200	194	246	346	85	185
200	16	48	295	340	200	194	246	346	85	185
200	25	69	310	360	200	189	253	353	105	205
200	40	82	320	375	200	189	253	353	105	205
250	10	62	350	400	200	219	271	371	85	185
250	16	70	355	400	200	214	278	378	105	205
250	25	109	370	425	250	233	312	437	105	230
250	40	135	385	450	250	233	312	437	105	230
300	10	89	400	455	200	239	303	403	105	205
300	16	88	410	455	200	239	303	403	105	205
300	25	136	430	485	250	256	335	460	105	230
300	40	193	450	515	250	271	382	507	125	250
350	10	103	460	505	200	261	325	425	105	205
350	16	134	470	520	250	282	361	486	105	230
350	25	198	490	555	250	296	400	525	125	250
350	40	280	510	580	250	329	436	561	125	250
400	10	150	515	565	250	311	390	515	105	230
400	16	164	525	580	250	311	390	515	105	230
400	25	243	550	620	250	316	421	546	125	250
400	40	367	585	660	350	331	490	665	155	330
450	10	196	565	640	250	345	439	564	125	250
450	16	215	585	640	250	345	439	564	125	250
450	25	276	610	685	350	361	507	682	155	330
450	40	402	610	685	500	362	516	691	155	330
500	10	219	620	670	250	370	464	589	125	250
500	16	267	650	715	250	370	464	589	125	250
500	25	403	660	730	350	380	525	700	155	330
500	40	576	670	755	500	396	583	833	185	435
600	10	301	725	780	250	418	513	638	125	250
600	16	450	770	840	350	433	548	723	155	330
600	25	619	770	845	500	450	614	864	185	435
600	40	809	795	890	500	492	638	888	185	435
700	10	478	840	895	350	478	593	768	155	330
700	16	646	840	910	500	502	653	903	185	435
700	25	941	875	960	500	533	680	931	185	435
700	40	Upon request								

e8 mm	h1 mm	h2 mm	h3 mm	L mm	b mm	P mm
-	222	117		180	-	-
-	222	117		190	-	-
-	222	117		200	-	-
-	221	145	24	210	150	-
-	221	165	47	210	150	-
-	221	165	47	210	150	-
-	221	170	52	230	180	-
-	221	170	52	230	180	-
-	242	195	48	230	180	-
-	242	208	60	230	180	-
-	221	200	82	250	200	-
-	242	200	53	250	200	-
-	312	232	74	250	200	-
-	310	245	87	250	210	-
-	242	228	80	270	260	11
-	242	228	80	270	260	11
-	312	252	94	270	260	6
-	341	258	65	270	300	6
-	242	253	105	290	280	23
-	311	260	102	290	280	23
-	342	295	102	290	280	20
-	342	290	97	290	290	20
-	311	283	125	310	310	40
-	311	290	132	310	320	40
-	342	325	132	310	320	31
-	431	330	92	310	350	31
-	342	308	115	330	320	46
-	342	320	127	330	320	46
-	433	345	122	330	400	46
-	431	343	105	330	400	46
-	342	335	142	350	360	63
-	342	358	165	350	360	63
-	431	380	142	350	360	61
-	462	378	141	350	360	60
-	342	390	197	390	400	92
-	431	420	182	390	440	92
-	464	435	201	390	440	89
-	464	445	211	390	440	87
-	431	448	210	430	440	120
-	464	455	221	430	500	121
-	464	480	246	430	500	118

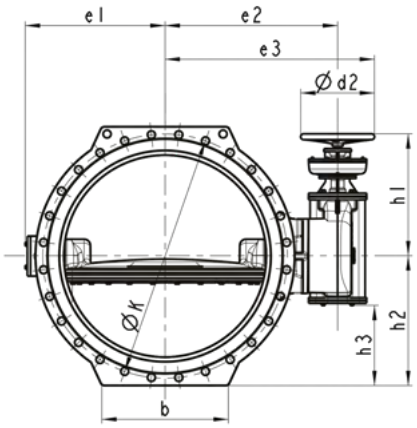

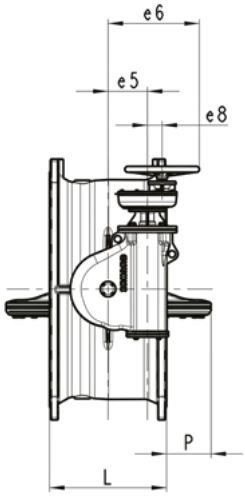

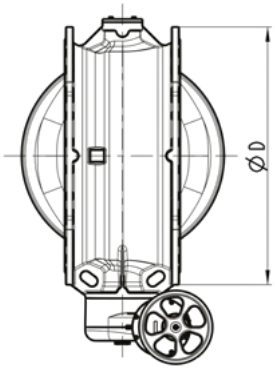

DIMENSIONS AND WEIGHTS

DOUBLE ECCENTRIC BUTTERFLY VALVE WITH HANDWHEEL

DN	PN	Weight Kg	K mm	D mm	d2 mm	e1 mm	e2 mm	e3 mm	e5 mm	e6 mm
ROCO Wave										
800	10	635	950	1015	350	538	653	828	155	330
800	16	837	950	1025	500	564	719	969	185	435
800	25	1197	990	1085	350	583	771	946	240	484
800	40	Upon request								
900	10	840	1050	1115	500	597	748	998	185	435
900	16	1044	1050	1125	500	547	788	1038	185	435
900	25	1509	1090	1185	350	651	820	995	240	484
900	40	Upon request								
1000	10	1031	1160	1230	500	663	818	1068	185	435
1000	16	1447	1170	1255	350	688	855	1030	240	484
1000	25	2070	1210	1320	350	721	987	1162	305	549
1000	40	Upon request								
1100	10	1288	1270	1340	500	725	870	1120	185	435
1100	16	1809	1270	1355	350	821	995	1170	240	484
1100	25	2457	1310	1420	350	854	1056	1231	305	549
1100	40	Upon request								
1200	10	1604	1380	1455	500	787	934	1184	185	435
1200	16	2171	1390	1485	350	819	990	1165	240	484
1200	25	2844	1420	1530	350	864	1067	1242	305	549
1200	40	Upon request								
1300	10	2196	1490		350	861	1030	1205	240	484
1300	16	Upon request								
1300	25	3323	1530	1645	350	955	1157	1332	305	549
1300	40	Upon request								
1400	10	2788	1590	1675	350	908	1077	1252	240	484
1400	16	3314	1590	1685	350	948	1144	1319	305	549
1400	25	3801	1640	1755	400	1094	1224	1424	315	515
1400	40	Upon request								
1500	10	3170	1700		350	984	1180	1390	305	549
1500	16	3913	1710		350	984	1180	1355	305	549
1500	25	Upon request								
1500	40	Upon request								
1600	10	3552	1820	1915	350	1031	1242	1417	305	549
1600	16	4513	1820	1930	350	1074	1277	1452	305	549
1600	25	5638	1860	1975	630	1189	1364	1679	400	715
1600	40	Upon request								
1800	10	4006	2020		350	1322	1469	1679	305	549
1800	16	4520	2020		500	1355	1449	1649	315	515
1800	25	6140	2070	2195	630	1363	1562	1877	500	815
1800	40	Upon request								
2000	10	5135	2230		350	1361	1539	1714	305	549
2000	16	6877	2230		500	1398	1553	1868	400	715
2000	25	7310	2300	2425	630	1373	1615	1930	500	815
2000	40	Upon request								

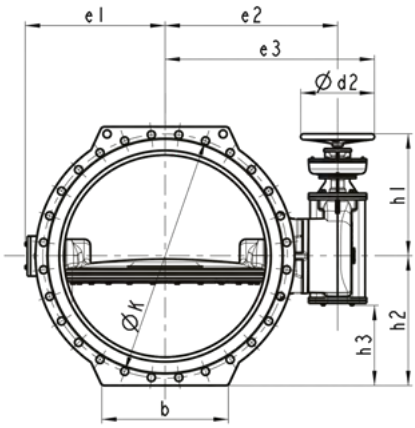

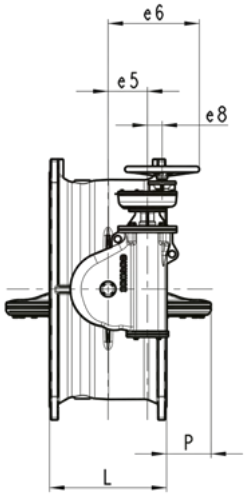

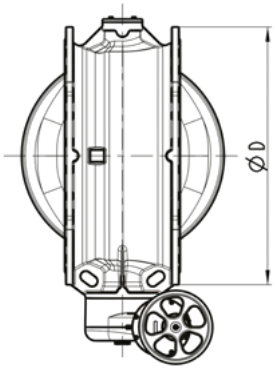

e8 mm	h1 mm	h2 mm	h3 mm	L mm	b mm	P mm
-	431	508	270	470	520	150
-	464	513	279	470	580	151
69	637	543	266	470	560	147
-	464	558	324	510	580	177
-	464	565	328	510	580	178
69	637	593	316	510	580	174
-	464	615	381	550	600	209
69	637	628	351	550	640	211
69	702	665	321	550	680	202
-	464	670	436	590	640	240
69	637	698	421	590	675	227
69	702	730	387	590	710	227
-	464	728	494	630	690	267
69	637	743	466	630	740	268
69	702	770	426	630	740	253
69	637	788	511	670	702	295
69	702	843	499	670	820	293
69	637	838	561	710	720	328
69	702	843	499	710	820	322
-	769	883	333	710	875	322
69	702	893	549	750	890	358
69	702	910	567	750	940	352
69	702	958	614	790	940	386
69	702	965	622	790	960	379
-	893	993	227	804	960	373
69	702	1065	721	870	1060	446
-	766	1075	524	870	1060	446
-	1140	1107	228	870	1060	445
69	702	1183	839	950	1160	506
-	894	1193	429	950	1170	505
-	1139	1225	344	950	1400	503

DIMENSIONS AND WEIGHTS

DOUBLE ECCENTRIC BUTTERFLY VALVE WITH ELECTRIC ACTUATOR (AUMA)

DN	PN	Weight kg	K mm	D mm	e1 mm	e2 mm	e3 mm	e5 mm	e6 mm
ROCO									
80	16	44	200	160	100	167	404	85	334
100	16	48	220	180	110	182	419	85	334
125	16	52	250	210	125	195	432	85	334
ROCO Wave									
150	16	56	240	285	155	201	439	85	335
150	25	64	250	300	169	221	459	85	335
150	40	67	250	300	169	221	459	85	335
200	10	67	295	340	194	246	484	85	335
200	16	67	295	340	194	246	484	85	335
200	25	85	310	360	189	253	491	105	355
200	40	98	320	375	189	253	491	105	355
250	10	81	350	400	219	271	509	85	335
250	16	86	355	400	219	278	516	105	355
250	25	129	370	425	233	312	550	105	355
250	40	155	385	450	233	312	550	105	355
300	10	105	400	455	239	303	541	105	355
300	16	108	410	455	239	303	541	105	355
300	25	156	430	485	256	335	573	105	355
300	40	213	450	515	271	382	620	125	375
350	10	124	460	505	261	325	563	105	355
350	16	154	470	520	282	361	599	105	355
350	25	218	490	555	296	400	638	125	375
350	40	55	510	580	329	436	674	125	375
400	10	170	515	565	311	390	628	105	355
400	16	184	525	580	311	390	628	105	355
400	25	263	550	620	316	421	659	125	375
400	40	386	585	660	331	490	728	155	474
450	10	216	565	640	345	439	677	125	375
450	16	235	585	640	345	439	677	125	375
450	25	294	610	685	361	507	754	155	474
450	40	421	610	685	362	516	754	155	474
500	10	239	620	670	370	464	702	125	375
500	16	287	650	715	370	464	702	125	375
500	25	421	660	730	380	525	763	155	474
500	40	615	670	755	396	583	821	185	504
600	10	321	725	780	418	513	751	125	375
600	16	469	770	840	433	548	786	155	474
600	25	658	770	845	450	614	852	185	504
600	40	848	795	890	492	638	876	185	504
700	10	497	840	895	478	593	831	155	474
700	16	685	840	910	502	653	891	185	504
700	25	980	875	960	533	680	919	185	504
700	40	Upon request							

e8 mm	h1 mm	h2 mm	h3 mm	L mm	b mm	P mm
-	438	117	-	180	-	-
-	438	117	-	190	-	-
-	438	117	-	200	-	-
	454	143	24	210	150	-
	454	165	47	210	150	-
	454	165	47	210	150	-
	454	170	52	230	180	-
	454	170	52	230	180	-
	475	195	48	230	180	-
	475	208	60	230	180	-
	454	200	82	250	200	-
	475	200	53	250	200	-
	542	232	74	250	200	-
	542	245	87	250	210	-
	475	228	80	270	260	11
	475	228	80	270	260	11
	542	252	94	270	260	6
	572	258	65	270	300	6
	475	253	105	290	280	23
	542	260	102	290	280	23
	572	295	102	290	280	20
	572	290	97	290	290	20
	542	283	125	310	310	40
	542	290	132	310	320	40
	572	325	132	310	320	31
	780	330	92	310	350	31
	572	308	115	330	320	46
	572	320	127	330	320	46
	780	343	105	330	400	46
69	780	343	105	330	400	46
	572	335	142	350	360	63
	572	358	165	350	360	63
69	780	380	142	350	360	61
69	805	378	142	350	360	60
	572	390	197	390	400	92
69	780	420	182	390	440	92
69	807	435	201	390	440	89
69	807	445	211	390	440	87
69	780	448	210	430	440	120
69	807	455	221	430	500	121
69	807	480	246	430	500	118

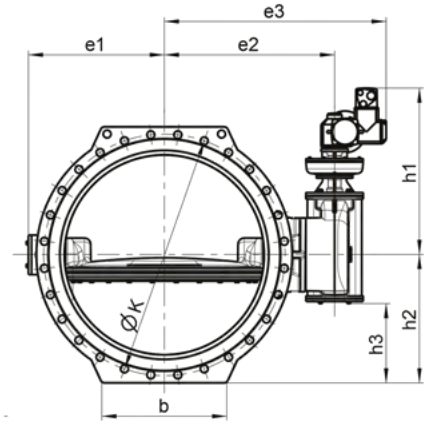

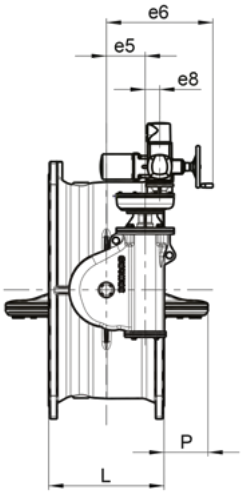

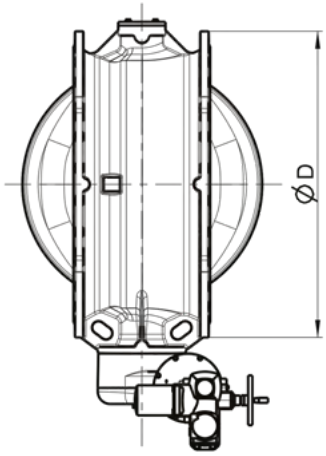

DIMENSIONS AND WEIGHTS

DOUBLE ECCENTRIC BUTTERFLY VALVE WITH ELECTRIC ACTUATOR (AUMA)

DN	PN	Weight kg	K mm	D mm	e1 mm	e2 mm	e3 mm	e5 mm	e6 mm
ROCO Wave									
800	10	653	950	1015	538	653	891	155	474
800	16	876	950	1025	564	719	956	185	504
800	25	1216	990	1085	583	771	1009	240	559
800	40	Upon request							
900	10	879	1050	1115	597	748	986	185	504
900	16	1083	1050	1125	547	788	1026	185	504
900	25	1532	1090	1185	651	820	1068	240	563
900	40	Upon request							
1000	10	1070	1160	1230	663	818	1056	185	504
1000	16	1465	1170	1255	688	855	1093	240	559
1000	25	2092	1210	1320	721	987	1185	305	628
1000	40	Upon request							
1100	10	1327	1270	1340	725	870	1107	185	504
1100	16	1829	1270	1355	821	995		240	563
1100	25	2479	1310	1420	854	1056	1304	305	628
1100	40	Upon request							
1200	10	1642	1380	1455	787	934	1172	185	504
1200	16	2193	1390	1485	819	990	1238	240	563
1200	25	2867	1420	1530	864	1067	1353	305	881
1200	40	Upon request							
1300	10	2226	1490	1575	861	1030		240	563
1300	16	Upon request							
1300	25	3345	1530	1645	955	1157	1405	305	628
1300	40	Upon request							
1400	10	2811	1590	1675	908	1077	1325	240	563
1400	16	3337	1590	1685	948	1144	1392	305	628
1400	25	3824	1640	1755	1094	1224	1540	315	739
1400	40	Upon request							
1500	10	3192	1700	1785	984	1180		305	628
1500	16	3936	1710	1820	984	1180		305	881
1500	25	Upon request							
1500	40	Upon request							
1600	10	3574	1820	1915	1031	1242	1490	305	628
1600	16	4535	1820	1930	1074	1277	1525	305	881
1600	25	5679	1860	1975	1189	1364	1600	400	739
1600	40	Upon request							
1800	10	4047	2020	2115	1322	1469		305	628
1800	16	4561	2020	2130	1355	1449		315	651
1800	25	6181	2070	2195	1363	1562	1848	500	839
1800	40	Upon request							
2000	10	5176	2230	2325	1361	1539		305	881
2000	16	6918	2230	2345	1398	1553		400	739
2000	25	7351	2300	2425	1373	1615	1901	500	839
2000	40	Upon request							

e8 mm	h1 mm	h2 mm	h3 mm	L mm	b mm	P mm
69	780	508	270	470	520	150
69	807	513	279	470	580	151
69	854	543	266	470	560	147
69	807	558	324	510	580	177
69	807	563	329	510	580	178
69	856	593	316	510	580	174
69	807	615	381	550	600	209
69	854	628	351	550	640	211
69	921	660	316	550	680	202
69	807	670	436	590	640	240
69	856	698	421	590	675	227
69	921	730	386	590	710	227
69	807	728	494	630	690	267
69	856	743	466	630	740	268
240	987	765	421	630	740	253
69	856	788	511	670	702	295
69	921	843	499	670	820	293
69	856	838	561	710	720	328
69	921	843	499	710	820	322
	1104	898	134	710	875	322
69	921	893	549	750	890	358
69	987	910	567	750	940	352
69	921	960	614	790	940	386
69	1009	965	622	790	960	379
	1104	988	224	804	960	373
69	921	1065	721	870	1060	446
	997	1075	524	870	1060	446
	1346	1107	228	870	1060	445
69	987	1183	839	950	1160	506
	1104	1193	429	950	1170	505
	1344	1225	344	950	1400	503

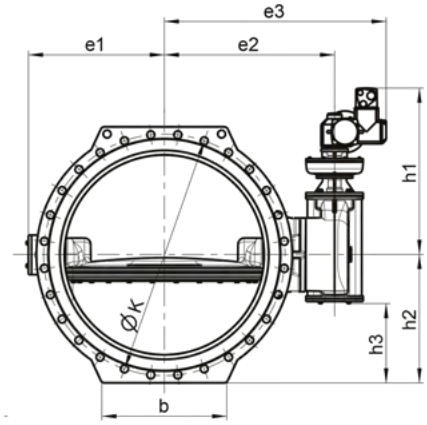

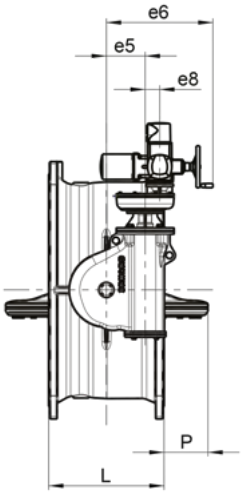

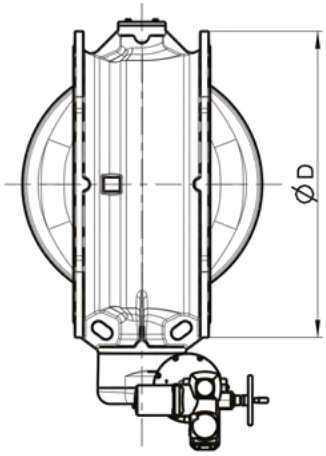

DIMENSIONS AND WEIGHTS

DOUBLE ECCENTRIC BUTTERFLY VALVE WITH SKG GEARBOX WIH ROUND PIVOT (FOR INSTALLATION OF EXTENSIONS)

DN	PN	Weight kg	K mm	D mm	e1 mm	e2 mm	e3 mm	e5 mm	e6 mm	e7 mm
ROCO										
80	16	22	200	160	100	167	229	85	185	
100	16	26	220	180	110	182	244	85	185	
125	16	30	250	210	125	195	257	85	185	
ROCO Wave										
150	16	36	240	285	155	201	264	85	148	10
150	25	44	250	300	169	221	283	85	1487	10
150	40	47	250	300	169	221	283	85	148	
200	10	47	295	340	194	246	309	85	148	10
200	16	47	295	340	194	246	309	85	148	10
200	25	65	310	360	189	253	316	105	168	10
200	40	78	320	375	189	253	316	105	168	
250	10	61	350	400	219	271	333	85	148	10
250	16	66	355	400	214	278	341	105	168	10
250	25	108	370	425	233	312	392	105	185	10
250	40	134	385	450	233	312	392	105	185	
300	10	85	400	455	239	303	366	105	168	10
300	16	88	410	455	239	303	366	105	168	10
300	25	135	430	485	256	335	415	105	185	10
300	40	192	450	515	271	382	462	125	205	
350	10	103	460	505	261	325	387	105	168	10
350	16	133	470	520	282	361	441	105	185	10
350	25	197	490	555	296	400	480	125	205	10
350	40	34	510	580	329	436	516	125	205	
400	10	149	515	565	311	390	470	105	185	10
400	16	163	525	580	311	390	470	105	185	10
400	25	242	550	620	316	421	501	125	205	10
400	40	365	585	660	331	490	590	155	255	
450	10	195	565	640	345	439	519	125	205	10
450	16	214	585	640	345	439	519	125	205	10
450	25	273	610	685	361	507	607	155	255	14
450	40	400	610	685	362	517	654	155	293	
500	10	218	620	670	370	464	544	125	205	10
500	16	266	650	715	370	464	544	125	205	10
500	25	400	660	730	380	525	625	155	255	14
500	40	594	670	755	396	583	721	185	323	
600	10	300	725	780	418	513	593	125	205	10
600	16	448	770	840	433	548	648	155	255	14
600	25	637	770	845	450	614	752	185	323	14
600	40	827	795	890	492	638	776	185	323	
700	10	476	840	895	478	593	693	155	255	14
700	16	664	840	910	502	653	790	185	323	16
700	25	959	875	960	533	680	818	185	323	
700	40	Upon request								

e8 mm	h1 mm	h2 mm	h3 mm	d1 mm	b1 mm	L mm	b mm	P mm
-	199	117		18		180	-	-
-	199	117		18		190	-	-
-	199	117		18		200	-	-
	200	143	24	18	6	210	150	-
	200	165	47	18	6	210	150	-
	202	165	47	18	12	210	150	-
	454	170	52	18	6	230	180	-
	454	170	52	18	6	230	180	-
	221	195	48	18	6	230	180	-
	223	208	60	18	12	230	180	-
	454	200	82	18	6	250	200	-
	475	200	53	18	6	250	200	-
	287	232	74	22	6	250	200	-
	288	245	87	22	12	250	210	-
	475	228	80	18	6	270	260	11
	475	228	80	18	6	270	260	11
	287	252	94	22	6	270	260	6
	320	258	65	22	12	270	300	6
	475	253	105	18	6	290	280	23
	542	260	102	22	6	290	280	23
	317	295	102	22	6	290	280	20
	317	290	97	22	6	290	290	20
	542	283	125	22	6	310	310	40
	542	290	132	22	6	310	320	40
	317	325	132	22	6	310	320	31
	398	330	92	25	8	310	350	31
	572	308	115	22	6	330	320	46
	572	320	127	22	6	330	320	46
	396	343	105	25	8	330	400	46
	530	343	105	25	12	330	400	46
	572	335	142	22	6	350	360	63
	572	358	165	22	6	350	360	63
	398	380	142	25	8	350	360	61
	427	378	142	30	8	350	360	60
	572	390	197	22	6	390	400	92
	780	420	182	25	8	390	440	92
	429	435	201	30	8	390	440	89
	429	445	211	30	8	390	440	87
	780	448	210	25	8	430	440	120
	807	455	221	30	8	430	500	121
	429	480	246	30	8	430	500	118

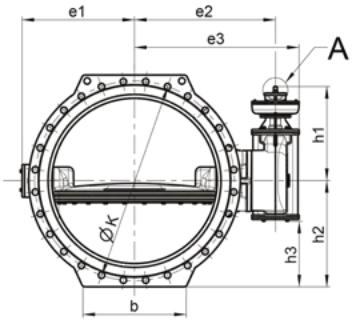

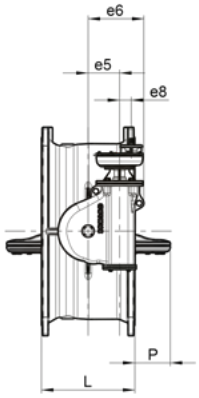

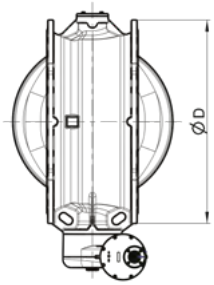

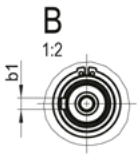

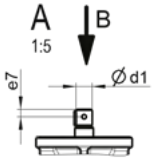

DIMENSIONS AND WEIGHTS

DOUBLE ECCENTRIC BUTTERFLY VALVE WITH SKG GEARBOX WIH ROUND PIVOT (FOR INSTALLATION OF EXTENSIONS)

DN	PN	Weight kg	K mm	D mm	e1 mm	e2 mm	e3 mm	e5 mm	e6 mm	e7 mm
ROCO Wave										
800	10	632	950	1015	538	653	753	155	255	14
800	16	855	950	1025	564	719	856	185	323	16
800	25	1195	990	1085	583	771	908	240	378	
800	40	Upon request								
900	10	858	1050	1115	597	748	885	185	323	16
900	16	1062	1050	1125	547	788	926	185	323	16
900	25	1507	1090	1185	651	820	957	240	378	
900	40	Upon request								
1000	10	1049	1160	1230	663	818	956	185	323	16
1000	16	1444	1170	1255	688	855	1017	240	402	10
1000	25	2067	1210	1320	721	987	1197	305	515	
1000	40	Upon request								
1100	10	1306	1270	1340	725	870	1007	185	323	16
1100	16	1806	1270	1355	821	995	1133	240	402	10
1100	25	2454	1310	1420	854	1056	1266	305	516	
1100	40	Upon request								
1200	10	1622	1380	1455	787	934	1071	185	323	16
1200	16	2168	1390	1485	819	990	1152	240	402	10
1200	25	2842	1420	1530	864	1067	1277	305	515	
1200	40	Upon request								
1300	10	2204	1490	1575	861	1030	1192	240	378	10
1300	16	Upon request								
1300	25	3321	1530	1645	955	1157	1367	305	516	
1300	40	Upon request								
1400	10	2786	1590	1675	908	1077	1239	240	378	10
1400	16	3312	1590	1685	948	1144	1354	305	515	10
1400	25	3801	1640	1755	1094	1224	1464	315	555	
1400	40	Upon request								
1500	10	3167	1700	1785	984	1180	1390	305	515	10
1500	16	3911	1710	1820	984	1180	1390	305	515	10
1500	25	4386								
1500	40	Upon request								
1600	10	3549	1820	1915	1031	1242	1452	305	515	10
1600	16	4510	1820	1930	1074	1277	1487	305	515	10
1600	25	4971	1860	1975	1189	1364	1604	402	640	
1600	40	Upon request								
1800	10	4006	2020	2115	1322	1469	1679	305	515	10
1800	16	4520	2020	2130	1355	1449	1689	315	555	
1800	25	6140	2070	2195	1363	1564	1857	500	795	
1800	40	Upon request								
2000	10	5135	2230	2325	1361	1539	1749	305	515	10
2000	16	6877	2230	2345	1398	1553	1793	400	540	
2000	25	7310	2300	2425	1373	1615	1910	500	795	
2000	40	Upon request								

e8 mm	h1 mm	h2 mm	h3 mm	d1 mm	b1 mm	L mm	b mm	P mm
	780	508	270	25	8	470	520	150
	807	513	279	30	8	470	580	151
69	604	543	266	22	6	470	560	147
	807	558	324	30	8	510	580	177
	807	563	329	30	8	510	580	178
69	604	593	316	22	6	510	580	174
	807	615	381	30	8	550	600	209
69	854	628	351	22	6	550	640	211
69	669	660	316	22	6	550	680	202
	807	670	436	30	8	590	640	240
	856	698	421	22	6	590	675	227
69	669	730	386	22	6	590	710	227
	807	728	494	30	8	630	690	267
69	856	743	466	22	6	630	740	268
69	669	765	421	22	6	630	740	253
	856	788	511	22	6	670	702	295
						0		
69	669	843	499	22	6	670	820	293
69	856	838	561	22	6	710	720	328
69	921	843	499	22	6	710	820	322
	744	898	134	30	8	710	875	322
	921	893	549	22	6	750	890	358
	987	910	567	22	6	750	940	352
69	921	960	614	22	6	790	940	386
69	1009	965	622	22	6	790	960	379
	867	988	224	30	12	804	960	373
	921	1065	721	22	6	870	1060	446
	997	1075	524	30	8	870	1060	446
	1111	1107	228	30	12	870	1060	445
	987	1183	839	22	6	950	1160	506
	1104	1193	429	30	8	950	1170	505
	1108	1225	344	30	12	950	1400	503

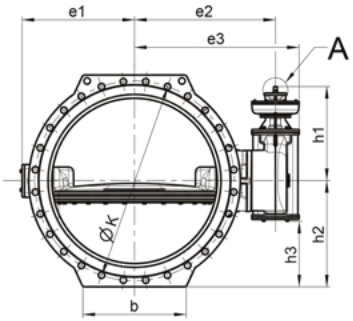

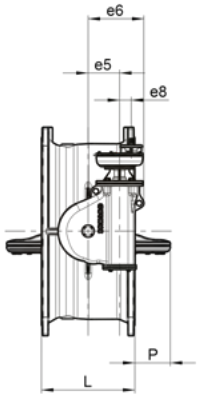

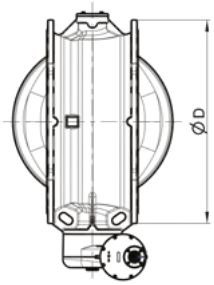

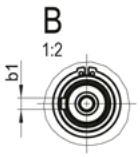

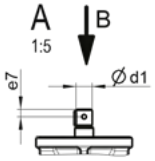

GEARBOX AND ACTUATOR SIZING

Operation with handwheel						Operation with AUMA electric actuator				
DN	PN	Gearbox size	ISO 5211 - Journal Ø mm	Turns per stroke	Hand-wheel Ø mm	Gearbox size - ISO 5211	Actuator size - ISO 5210	Torque CLOSE Nm	Torque OPEN Nm	Operating time s
ROCO										
80	16	SKG 01	F18 - 07	18	200	SKG 01 - F07	SA 07.2 - F10	10	30	24
100	16	SKG 01	F18 - 07	18	200	SKG 01 - F07	SA 07.2 - F10	10	30	24
125	16	SKG 01	F18 - 07	18	200	SKG 01 - F07	SA 07.2 - F10	10	30	24
ROCO Wave										
150	16	SKG 05	F18 - 10	18	200	SKG 05	SA 07.2 - F10	10	30	24
150	25	SKG 05	F28 - 10	18	200	SKG 05	SA 07.2 - F10	20	30	24
150	40	SKG 05	F28 - 10	18	200	SKG 05	SA 07.2 - F10	20	30	24
200	10	SKG 05	F28 - 10	18	200	SKG 05	SA 07.2 - F10	10	30	24
200	16	SKG 05	F28 - 10	18	200	SKG 05	SA 07.2 - F10	20	30	24
200	25	SKG 1	F36 - 12	25	200	SKG 1	SA 07.2 - F10	20	30	33
200	40	SKG 1	F36 - 12	25	200	SKG 1	SA 07.2 - F10	30	30	33
250	10	SKG 05	F28 - 10	18	200	SKG 05	SA 07.2 - F10	20	30	24
250	16	SKG 1	F36 - 12	25	200	SKG 1	SA 07.2 - F10	20	30	33
250	25	SKG2	F48 - 14	29	250	SKG2	SA 07.6 - F10	30	60	39
250	40	SKG2	F48 - 14	29	250	SKG2	SA 07.6 - F10	40	60	39
300	10	SKG 1	F36 - 12	25	200	SKG 1	SA 07.2 - F10	20	30	33
300	16	SKG1	F36 - 12	25	200	SKG1	SA 07.2 - F10	30	30	33
300	25	SKG2	F48 - 14	29	250	SKG2	SA 07.6 - F10	40	60	39
300	40	SKG4	F60 - 16	36	250	SKG4	SA 07.6 - F10	50	60	48
350	10	SKG1	F36 - 12	25	200	SKG1	SA 07.6 - F10	30	60	33
350	16	SKG2	F48 - 14	29	250	SKG2	SA 07.6 - F10	40	60	39
350	25	SKG4	F60 - 16	36	250	SKG4	SA 07.6 - F10	50	60	48
350	40	SKG4	F60 - 16	36	250	SKG4	SA 10.2 - F10	70	120	48
400	10	SKG2	F14 - 48	29	250	SKG2	SA 07.6 - F10	40	60	39
400	16	SKG2	F48 - 14	29	250	SKG2	SA 07.6 - F10	50	60	39
400	25	SKG4	F60 - 16	36	250	SKG4	SA 07.6 - F10	60	60	48
400	40	SKG8	F72 - 25	148	350	SKG8/IV4:1/25	SA 07.6 - F10	30	60	99
450	10	SKG4	F60 - 16	36	250	SKG4	SA 07.6 - F10	40	60	48
450	16	SKG4	F60 - 16	36	250	SKG4	SA 07.6 - F10	50	60	48
450	25	SKG8	F72 - 25	148	350	SKG8/IV4:1/25	SA 07.6 - F10	30	60	99
450	40	SKG8	F72 - 25	148	350	SKG8/IV4:1/25	SA 07.6 - F10	40	60	99
500	10	SKG4	F60 - 16	36	250	SKG4	SA 07.6 - F10	50	60	48
500	16	SKG4	F60 - 16	36	250	SKG4	SA 07.6 - F10	60	60	48
500	25	SKG8	F72 - 25	148	350	SKG8/IV4:1/25	SA 07.6 - F10	30	60	99
500	40	SKG16	F80 - 30	184	500	SKG16/IV4:1/25	SA 07.6 - F10	30	60	123
600	10	SKG4	F60 - 16	36	250	SKG4	SA 07.6 - F10	60	60	48
600	16	SKG8	F72 - 25	148	350	SKG8/IV4:1/25	SA 07.6 - F10	30	60	99
600	25	SKG16	F80 - 30	184	500	SKG16/IV4:1/25	SA 07.6 - F10	30	60	123
600	40	SKG16	F98 - 30	184	500	SKG16/IV4:1/25	SA 07.6 - F10	50	60	123
700	10	SKG8	F25 - 72	148	350	SKG8/IV25/4:1	SA 07.6 - F10	30	60	99
700	16	SKG16	F80 - 30	184	500	SKG16/IV4:1/25	SA 07.6 - F10	30	60	123
700	25	SKG16	F98 - 30	184	500	SKG16/IV4:1/25	SA 07.6 - F10	50	60	123
700	40	SKG32/IV4:1/25	F110 - 35	242	350	SKG32/IV4:1/25	SA 07.6 - F10	60	60	161
750	10	SKG8	F72 - 25	148	350	SKG8/IV4:1/25	SA 07.6 - F10	30	60	99
750	25	SKG16	F30 - 98	184	500	SKG16/IV25/4:1	SA 07.6 - F10	50	60	123
750	40	SKG32/IV25/4:1	F30 - 110	242	350	SKG32/IV25/4:1	SA 10.2 - F10	60	120	161
800	10	SKG8	F25 - 72	148	350	SKG8/IV25/4:1	SA 07.6 - F10	40	60	99
800	16	SKG16	F30 - 98	184	500	SKG16/IV25/4:1	SA 07.6 - F10	40	60	123
800	25	SKG32/IV25/4:1	F35 - 110	242	350	SKG32/IV25/4:1	SA 07.6 - F10	50	60	161
800	40	SKG32/IV25/4:1	F35 - 110	242	350	SKG32/IV25/4:1	SA 10.2 - F10	80	120	161

GEARBOX AND ACTUATOR SIZING

Operation with handwheel						Operation with AUMA electric actuator				
DN	PN	Gearbox size	ISO 5211 - Journal Ø mm	Turns per stroke	Hand-wheel Ø mm	Gearbox size - ISO 5211	Actuator size - ISO 5210	Torque CLOSE Nm	Torque OPEN Nm	Operating time s
900	10	SKG16	F30 - 80	184	500	SKG16/IV25/4:1	SA 07.6 - F10	30	60	123
900	16	SKG16	F30 - 98	184	500	SKG16/IV25/4:1	SA 07.6 - F10	50	60	123
900	25	SKG32/IV25/4:1	F35 - 110	242	350	SKG32/IV25/4:1	SA 10.2 - F10	70	120	161
900	40	SKG63/IV25/4:1	F40 - 150	266	350	SKG63/IV25/4:1	SA 10.2 - F10	100	120	177
1000	10	SKG16	F30 - 98	184	500	SKG16/IV25/4:1	SA 07.6 - F10	40	60	123
1000	16	SKG32/IV25/4:1	F35 - 110	242	350	SKG32/IV25/4:1	SA 07.6 - F10	50	60	161
1000	25	SKG63/IV25/4:1	F40 - 135	266	350	SKG63/IV25/4:1	SA 10.2 - F10	90	120	177
1000	40	SKG63/IV25/4:1	F40 - 150	266	350	SKG63/GST14.5/4:1	SA 14.2 - F14	130	250	177
1100	10	SKG16	F30 - 98	184	500	SKG16/IV25/4:1	SA 07.6 - F10	50	60	123
1100	16	SKG32/IV25/4:1	F35 - 110	242	350	SKG32/IV25/4:1	SA 10.2 - F10	70	120	161
1100	25	SKG63/IV25/4:1	F40 - 150	266	350	SKG63/IV25/4:1	SA 10.2 - F10	100	120	177
1200	10	SKG16	F30 - 98	184	500	SKG16/IV25/4:1	SA 07.6 - F10	50	60	123
1200	16	SKG32/IV25/4:1	F35 - 110	242	350	SKG32/IV25/4:1	SA 10.2 - F10	80	120	161
1200	25	SKG63/IV25/4:1	F40 - 150	266	350	SKG63/GST14.5/4:1	SA 14.2 - F14	120	250	177
1300	10	SKG32/IV25/4:1	F35 - 110	242	350	SKG32/IV25/4:1	SA 10.2 - F10	60	120	161
1300	16	SKG63/IV25/4:1	F40 - 165	242	350	SKG63/IV25/4:1	SA 10.2 - F10	90	120	161
1300	25	SKG63/IV25/4:1	F40 - 165	266	350	SKG63/IV25/4:1	SA 10.2 - F10	140	120	177
1300	40	GS400/GZ35.1/32:1	F48 - 180	428	500	GS400/GZ35.1/16:1	SA 14.2 - F14	150	250	285
1400	10	SKG32/IV25/4:1	F35 - 110	242	350	SKG32/IV25/4:1	SA 10.2 - F10	70	120	161
1400	16	SKG63/IV25/4:1	F40 - 150	266	350	SKG63/IV25/4:1	SA 10.2 - F10	110	120	177
1500	10	SKG63/IV25/4:1	F40 - 135	266	350	SKG63/IV25/4:1	SA 10.2 - F10	80	120	177
1500	16	SKG63/IV25/4:1	F40 - 135	266	350	SKG63/GST14.5/4:1	SA 14.2 - F14	130	250	177
1600	10	SKG63/IV25/4:1	F40 - 135	266	350	SKG63/IV25/4:1	SA 10.2 - F10	90	120	177
1600	16	SKG63/IV25/4:1	F40 - 150	266	350	SKG63/GST14.5/4:1	SA 14.2 - F14	140	250	177
1600	25	GS400/GZ35.1/32:1	F48 - 180	428	500	GS400/GZ35.1/16:1	SA 14.2 - F14	160	250	285
1600	40	GS500/GZ40.1/64:1	F60 - 250	694	500	GS500/GZ40.1/16:1	SA 14.2 - F14	180	250	463
1800	10	SKG63/IV25/4:1	F40 - 150	266	350	SKG63/IV25/4:1	SA 10.2 - F10	120	120	177
1800	16	GS315/GZ30.1/32:1	F48 - 170	428	500	GS315/GZ30.1/16:1	SA 10.2 - F10	120	120	285
1800	25	GS400/GZ35.1/32:1	F60 - 240	694	500	GS400/GZ35.1/16:1	SA 14.2 - F14	160	250	463
2000	10	SKG63/IV25/4:1	F40 - 160	266	350	SKG63/GST14.5/4:1	SA14.2 - F14	160	250	177
2000	16	GS400/GZ35.1/32:1	F48 - 180	428	500	GS400/GZ35.1/16:1	SA 14.2 - F14	140	250	285
2000	25	GS400/GZ35.1/32:1	F60 - 240	694	500	GS400/GZ35.1/16:1	SA 14.2 - F14	160	250	463

INSTALLATION AT THE DRINKING WATER TREATMENT PLANT IN SINDELFINGEN, GERMANY

www.talis-group.com

TALIS is the undisputed Number One for water transport and water flow control. TALIS has the best solutions available in the fields of water and energy management as well as for industrial and communal applications. We have numerous products for comprehensive solutions for the whole water cycle – from hydrants, butterfly valves and knife gate valves through to needle valves. Our experience, innovative technology, global expertise and individual consultation processes form the basis for developing long-term solutions for the efficient treatment of the vitally important resource "water".

TALIS Management Holding
Postfach 1280
D-89502 Heidenheim
Meeboldstrasse 22
D-89522 Heidenheim
PHONE +49 7321 320-0
FAX +49 7321 320-491
E-MAIL info@talis-group.com
INTERNET www.talis-group.com

PBR_DBV_191203_ROCO_WAVE_EN

TALIS